GREENWICH PUBLIC SCHOOLS
Purchasing Department
290 Greenwich Avenue
Greenwich, Connecticut 06830
(203) 625-7411
Fax (203) 625-7677

EUGENE H. WATTS
Senior Buyer

May 7, 2018

Dear Sir/Madam:

You are invited to submit a bid for Playground Equipment Installation Bid for Greenwich Public Schools. The attached bid specifications detail the requirements we are looking for.

Bidders are urged to read all documents carefully and fill out all information requested. Bids which are incomplete, obscure, or conditional, and which contain irregularities of any kind, will be subject to rejection for failure to comply strictly with these conditions.

Bids must be submitted on the schedule form attached hereto. All unit prices must be filled in. Each bid must be submitted with one (1) original and three (3) copies of the bid. Bidders must submit bids in a clear, concise and legible manner so as to permit proper evaluation of responsive bids. Faxed bids will not be accepted. The original bid and copies must be in a sealed envelope plainly marked:

Playground Equipment Installation
Opening Date: 5/24/18
Opening Time: 11:00 A.M.
BID NUMBER: 2204-18

Mandatory Walk-thru 5/14/18 @ 2:30 PM
Old Greenwich School
285 SOUND BEACH AVENUE
OLD GREENWICH, CT

Sealed Bids for supplying the above will be received by the Purchasing Department at the above address until 11:00 a.m. at which time they will be opened and read publicly. All bidders and other interested people are invited to be present at the opening of these bids.

Very truly yours,

Eugene H Watts

_____
Eugene H. Watts

1. BACKGROUND:

The Town of Greenwich, CT is about 30 miles northeast of New York City and has a population of about 60,000 people. The Greenwich Public Schools enjoy a national reputation for excellence and have strong support from the community. Our fifteen public schools have a current enrollment of 9000 students and consist of eleven elementary schools (K-5), three middle schools (6-8), and one comprehensive high school (9-12). Our district also offers some pre-K and alternative high schools programs.

2. CONTRACT LENGTH:

This Request for Proposal is for awarding a contract to cover the period beginning immediately through August 25, 2018 with the option to extend if agreed upon by both parties. Once this proposal is awarded, the proposer must make arrangements to meet with Greenwich Public Schools if required.

3. OPTION TO EXTEND:

The Board of Education may, at their option and with the approval of the Bidder, extend the period of this agreement for the schools. If the Board of Education intends to extend the contract period, the Consultant shall be notified in writing by the Purchasing Department at least fourteen (14) calendar days prior to the expiration of the original contract.

The service and work contemplated under this Contract shall be completed in full on or before August 25, 2018 with one option to extend. If the GPS intends to extend the contract period, the vendor will be notified in writing.

4. PROPOSAL EVALUATION CRITERIA:

The following criteria guidelines will be used in analyzing and evaluating this proposal. Conformance to the requirements of this Bid, i.e. conformance to Terms, Conditions and Scope of Work. Proven skills and technical competence.

5. A NARRATIVE DESCRIBING THE FIRMS APPROACH TO UNDERTAKING THE SCOPE OF THE WORK INCLUDING:

A) Cost/service fee (overall cost to the Board of Education with all factors considered).
B) Presentation to selection committee, if requested.

6. AWARD OF CONTRACT:

The contract will be awarded by the Board of Education to the qualified Bidder at compensation determined to be fair and reasonable considering budgetary limitations, scope, complexity and the nature of goods and/or services.

7. PURPOSE:

The Board of Education of the Greenwich Public School District of Greenwich, CT is

soliciting bids to provide removal and Installation of Playground Equipment only.

8. OVERVIEW:

The Board of Education of the Greenwich Public Schools wishes to solicit bids for Playground Equipment Installation.

9. SCOPE OF SERVICE:

See attachments

10. SELECTION CRITERIA:

A selection committee will review all bids. The following information, in addition to the requirements, terms and conditions identified throughout this Bid Document, will be considered as part of the Selection process.

Prospective Contractors shall submit documentation for the evaluation criteria listed below.

a. Experience

b. Ability to Perform the Work to Schedules

c. The bid shall include experience on similar projects. The proposal should demonstrate familiarity with Connecticut requirements.

11. FEE PROPOSAL:

The District reserves the right to provide payment in accordance with completion of services based on the Project Schedule.

12. QUESTIONS:

All questions must be directed to: bid_department@greenwich.k12.ct.us. In the subject line of your e-mail, please put "Bid 2204-18 Playground". All questions must be received no later than noon on May 16, 2018. All answers will be posted as an addendum to our website, www.greenwichschools.org no later than 3:00 p.m. on May 21, 2018. Failure to comply with these conditions will result in the proposer waiving his/her right to dispute the proposal specifications and conditions. It is the proposer's responsibility to check our website for all addenda up to the day before the opening date.

The Board of Education reserves the right to waive any informalities in the proposal or reject any or all bids or to accept any proposal which appears to be in the best interest of the Board. The Greenwich Board of Education reserves the right to award like items by group at our discretion.

Any proposal may be withdrawn prior to the opening time and date. Any proposal received after the time and date as specified will not be considered.

13. ACCEPTANCE:

The department will make determination of the acceptability of work. Work shall be completed in a responsive and professional manner and in accordance with the specifications.

14. GENERAL TERMS AND CONDITIONS:

Sealed bids for furnishing Kitchen Equipment Maintenance and Repair for Greenwich Public Schools, as specified on the attached proposal specification sheets, will be received at the time and date above. All bidders and other interested persons are invited to be present at the opening of these bids that will take place at the Board of Education.

The Board of Education reserves the right to waive any informality in the proposal or reject any or all bids or to accept any proposal, which appears to be in the best interest of the Board. Any proposal may be withdrawn prior to the opening time and date. Any proposal received after the time and date as specified will not be considered.

The Board of Education may consider proximity of vendor's service as a factor in determining lowest responsible proposal.

If the Board of Education deems it necessary, the Board of Education may postpone the date for the opening of these bids by notifying each proposer by telephone, mail or the issuing of an addendum through our website.

The Board of Education shall have the right to take such steps as it deems necessary to determine the ability of the proposer to perform the work and the proposer shall furnish the Board of Education with information and data for this purpose as the Board of Education may request. The right is reserved to reject any proposal where, on investigation, the evidence or information submitted by such bidders does not satisfy the Board of Education that the proposer is qualified to carry out properly the terms of the contract.

Consumption or use of alcohol and/or drugs is prohibited on school property. Any individual with alcohol or drugs will be removed from said property. Smoking is prohibited in all school buildings and on school grounds.

15. TAX:

No amount shall be added for the Connecticut Sales Tax or Federal Tax. The Greenwich Public Schools is exempt from the payment of taxes imposed by the Federal Government and/or State of Connecticut. Taxes must not be included in the bid price.

Bidders must comply with all Federal, State and Local Laws and Regulations and all applicable safety standards.

16. COLLUSION AMONG BIDDERS:

More than one offer from an individual, firm partnership, corporation or association under the same or different name will be rejected. Reasonable grounds for believing that a proposer is interested in more than one proposal for the work contemplated will cause rejection of all bidders in which the proposer is interested. Any or all bidders will be rejected if there is any reason for believing that collusion exists among the bidders.

Participants in such collusion may not be considered in future offers for the same work. Each proposer, by submitting a proposal, certifies that it is not a part to any collusive action.

17. EMPLOYMENT DISCRIMINATION BY CONTRACTOR PROHIBITED:

The successful proposer will not discriminate against any employee or applicant for employment because of race, religion, color, sex, or national origin, except where religion, sex or national origin is a bona fide occupational qualification reasonably necessary to the normal operation of the contractor. The successful proposer agrees to post in a conspicuous place, available to employees and applicants for employment, notices setting forth the provision of this nondiscrimination clause. The successful Proposer in all solicitation or advertisements for employees, placed by or on behalf of the contractor, will state that such successful Proposer is an Equal Opportunity Employer.

Notices, advertisements, and solicitations placed in accordance with Federal Law, rules or regulation shall, be deemed sufficient for the purpose of meeting the requirements of this section.

18. INTENTION:

The intention of this BID/BID is to establish a contract with one or more contractors who will, upon request provide the time with the services, labor, and supplies described in this solicitation. This is no guarantee as to the amount of services, labor or supplies that the Board of Education may purchase during the term of this contract.

19. PRICE IS ALL INCLUSIVE:

Bid prices shall encompass everything necessary for furnishing all items, supplies or services as specified, and in accordance with the specifications, including proper packing, cost of delivery, travel time to the service location and back to your facility, overhead, mileage, profit, travel, administrative costs, testing of equipment, office supplies, phone, photocopies, mobilization, and in the case of services, completion of same, as per specifications. Materials and equipment are invoiced on a separate line item and will be marked up by the indicated the percent (%) rate as reported in the Price Sheet.

20. PRICE DISCREPANCY:

In the event of a discrepancy between the Unit Price and the Extension, the Unit Price shall prevail.

21. VENDOR:

The Greenwich Board of Education reserves the right to accept the bid or bids of the lowest qualified bidder, kind, quality and material being equal, to select a single group from the bidder, or to accept the bid as a whole; to reject any and all bids, and to waive any omission or informalities in any bid.

NON-COLLUSION AFFIDAVIT

GREENWICH PUBLIC SCHOOLS
290 GREENWICH AVENUE
GREENWICH, CONNECTICUT

State of _____:

County of _____:s.s.

I state that I am the_____ of_____
(TITLE) (NAME OF MY FIRM)
and that I am authorized to make this affidavit on behalf of my firm, and its owners, directors, and officers. I am the person responsible in my firm for the price(s) and the amount of this bid.

I state that:

(1) The price(s) and amount of this bid have been arrived at independently and without consultation, communication or agreement with any other contractor, bidder or potential bidder.

(2) Neither the price(s) nor the amount of this bid, and neither the approximate price(s) nor approximate amount of this bid, have been disclosed to any other firm or person who is a bidder or potential bidder, and they will not be disclosed before the bid opening.

(3) No attempt has been made or will be made to induce any firm or person to refrain from bidding on this contract, or to submit a bid higher than this bid, or to submit any intentionally high or noncompetitive bid or other form of complementary bid.

(4) I fully understand that more than one offer from an individual, firm, partnership; corporation or association under the same or different name will be rejected. Reasonable grounds for believing that a bidder is interested in more than one bid for the work contemplated may cause rejection of all bidders in which the bidder is interested. Any or all bidders will be rejected if there is any reason for believing that collusion exists among the bidders. Participants in such collusion may not be considered in future offers for the same work. Each bidder by submitting a bid certifies that it is not a part to any collusive action.

(5) The bid of my firm is made in good faith and not pursuant to any agreement or discussion with or inducement from, any firm or person to submit a complementary or other noncompetitive bid.

(6) _____ its affiliates, subsidiaries, officers, directors
(NAME OF MY FIRM)
and employees are not currently under investigation by any governmental agency and have not in the last four years been convicted or found liable for any act prohibited by State or Federal law in any jurisdiction, involving conspiracy or collusion with respect to bidding on any public contract, except as follows: I state that understands _____ and acknowledges that the above representations are
(NAME OF MY FIRM)
material and important, and will be relied on by Greenwich Public Schools in awarding the bid for which this is submitted. I understand and my firm understands that any misstatement in this affidavit is and shall be treated as fraudulent concealment from

Greenwich Public Schools of the true facts relating to the submission of Bids for this contract.

(7) I agree to furnish and deliver the services on the date and time agreed upon by the _____ and the Greenwich Board of
(NAME OF MY FIRM)
Education. Furthermore, there will not be cancellations to the Board of Education. If a bidder submits a bid on any item he/she will be responsible for delivering the service at the bid cost, in accordance with the attached above specifications, which were submitted with this bid and upon which the bid was made.

(8) By signing this bid, the bidder understands and agrees to the attached terms and specifications, including Collusion among Bidders and Employment Discrimination by the Contractor Prohibited.

(9) In submitting this bid/proposal, the undersigned declares that this is made without any connection with any persons making another bid/proposal on the same contract; that the bid/proposal is in all respects fair and without collusion, fraud or mental reservation; and that no official of the Town, or any person in the employ of the Town, is directly or indirectly interested in said bid/proposal or in the supplies or work to which it relates, or in any portion of the profits thereof.

(10) In submitting this bid, the undersigned further declares that it has not, and will not, induce or attempt to induce any Town of Greenwich employee or officer to violate the Greenwich Code of Ethics in connection with its offer to provide goods or services under, or otherwise in the performance of, such contract.

(11) The undersigned further understands that the above declarations are material representations to the Town of Greenwich made as a condition to the acceptance of the bid/proposal. If found to be false, the Town of Greenwich retains the right to reject said bid/proposal and rescind any resulting contract and/or purchase order and notify the undersigned accordingly, thereby declaring as void said bid/proposal and contract or purchase order.

(12) The Greenwich Code of Ethics can be found at www.greenwichct.org. Code of Ethics stated as follows:

2. DEFINITION. (1) Indirect interest, without limiting its generality, shall mean and include the interest of any subcontractor in any prime contract with the town and the interest of any person or his immediate family in any corporation, firm or partnership which has a direct or indirect interest in any transaction with the town. (2) Substantial financial interest shall mean any financial interest, direct or indirect, which is more that nominal and which is not common to the interest of other citizens of the town. (3) Town officer shall mean and include any official, employee, agent, consultant or member, elected or appointed, of any board, department, commission, committee, legislative body or other agency of the town. (4) Transaction shall mean and include the offer, sale or furnishing of any real or personal property, material, supplies or services by any person, directly or indirectly, as vendor, prime contractor, subcontractor or otherwise, for the use and benefit of the town for a valuable consideration, excepting the services of any person as a town officer.

3. GIFTS AND FAVORS. No town officer or his immediate family shall accept any valuable gift, thing, favor, loan or promise which might tend to influence the performance or nonperformance of his official duties.

4. IMPROPER INFLUENCE. No town officer having a substantial financial interest in any transaction with the town or in any action to be taken by the town shall use his office to exert his influence or to vote on such transaction or action.

VENDOR INFORMATION: (Please print the following)

_____

VENDOR NAME

_____

ADDRESS

_____

TELEPHONE **FAX#**

_____

E-MAIL **WEB SITE**

_____

AUTHORIZED SIGNATURE **TITLE**

_____

TAXPAYER IDENTIFICATION NO.

_____

INCORPORATED IN THE STATE OF

SWORN TO AND SUBSCRIBED BEFORE

THIS _____ DAY OF

_____, 20_____

_____ **MY COMMISSION EXPIRES_____**

NOTARY PUBLIC

REFERENCES

Please list five (5) references where your company has performed these services.

1. _____
NAME AND ADDRESS

_____
TELEPHONE # FAX # E-MAIL

_____
CONTACT PERSON AND TELEPHONE NUMBER

2. _____
NAME AND ADDRESS

_____
TELEPHONE # FAX # E-MAIL

_____
CONTACT PERSON AND TELEPHONE NUMBER

3. _____
NAME AND ADDRESS

_____
TELEPHONE # FAX # E-MAIL

_____
CONTACT PERSON AND TELEPHONE NUMBER

4. _____
NAME AND ADDRESS

_____
TELEPHONE # FAX # E-MAIL

_____
CONTACT PERSON AND TELEPHONE NUMBER

5. _____
NAME AND ADDRESS

_____
TELEPHONE # FAX # E-MAIL

_____
CONTACT PERSON AND TELEPHONE NUMBER

COST SHEET

Remove and dispose of existing and geodesic dome climber $_____

Install only: Gametime High Stepper Regular net climber, and four-boy swing as “Freestanding Equipment” $_____

Furnish and install 3,322 SF of poured-in-place rubber surfacing. Depth of surfacing to be sufficient for critical fall height of ploy Equipment. Surfacing to be 50% standard color and 50% block. $_____

Total: $_____

CHECK LIST /
INSURANCE
PROCEDURE

PLEASE NOTE:

THIS PAGE MUST BE RETURNED WITH YOUR BID/PROPOSAL. FAILURE TO DO SO MAY RESULT IN YOUR BID/PROPOSAL BEING REJECTED.

Please take the insurance requirements of the Contract to your agent/broker immediately upon receipt of the bid/proposal documents to determine your existing coverage and any costs for new or additional coverage required for the work noted in this Request for Bid/Proposal. Any bids/proposals with deficient insurance requirements will be rejected. The firm who is awarded the Bid/Proposal must return the contract, agent/broker and insurance form within two (2) weeks from the date on the award letter.

PLEASE CHECK THE APPROPRIATE BOX		**YES**	**NO**
1. General Aggregate	$2,000,000.00	☐	☐
2. Per Occurrence	$1,000,000.00	☐	☐
3. Automobile Liability	$1,000,000.00	☐	☐
4. Excess Liability	$5,000,000.00	☐	☐
5. Worker's Compensation and Employer's Liability		☐	☐
6. Town as Additional Insured		☐	☐
7. Ability to Return Contract and Insurance Documents Within Two (2) Weeks		☐	☐
8. Sample contract signed and returned with Proposal.		☐	☐
9. Able to Provide the Town with Thirty (30) Days Prior Written Notice of Cancellation		☐	☐

STATEMENT OF VENDOR:

I have read the insurance requirements for this work and have taken the documentation to my insurance agent/broker. The bid/proposal cost reflects any additional costs relating to insurance requirements for this work.

THE FOLLOWING PAGES ARE A SAMPLE COPY OF THE TOWN OF GREENWICH CONTRACT FOR YOUR REVIEW. YOU MUST BE ABLE TO SIGN THIS CONTRACT AND MEET THE NECESSARY INSURANCE AS REQUIRED BY THE TOWN OF GREENWICH IN ORDER FOR YOUR PROPOSAL TO BE CONSIDERED.

State of Connecticut
Town of Greenwich
Contract

Town Department: Greenwich Public Schools — Contract No.

Division: Facilities — Account Name:

Name and Address Of Contractor — Account Code:

This Agreement made this between Town of Greenwich hereafter called the Town and , hereafter called the Contractor.
Witnessed as follows:

1. The contractor agrees to furnish materials and perform services as shown in specifications and contract documents hereto attached and made a part hereof, and consisting of numbered pages from 1 to .
2. The Town agrees to pay the price designated for such materials and services upon certification by the proper agent of the Town.
3. This contract shall not be valid until approved by the Town Counsel and countersigned by the Town Comptroller.

TOWN OF GREENWICH
By_____
Its

CONTRACTOR
By_____
Its

CORPORATE ACKNOWLEDGEMENT

STATE OF
COUNTY OF } ss: _____, 2018

Personally appeared_____ of _____
Name and title of Officer (Corporation)

Signer and sealer of the foregoing instrument, who being duly authorized and appointed by the Board of Directors of said Corporation, acknowledged the foregoing instrument to be his free act and deed and the free act and deed of said _____, before me
(Corporation)

_____
Notary Public (seal)

INDIVIDUAL OR PARTNERSHIP ACKNOWLEDGEMENT
(delete words in parenthesis if not a partnership)

STATE OF
COUNTY OF ss: _____, 2018

Personally appeared _____, (one of the members of the partnership of) _____, signer and sealer of the foregoing instrument and acknowledged the same to be his free act and deed (and the free act and deed of said partnership), before me

_____
Notary Public (seal)

Approved as to legal sufficiency

Date_____ _____
Town Counsel

I hereby certify that the estimated amount of this contract does not exceed the unencumbered balances of amounts duly appropriated and against which this contract is chargeable as indicated hereon.

Date_____ _____
Comptroller

AGREEMENT

CONTRACT NO.

THIS AGREEMENT, executed this in the year Two Thousand Fifteen (herein referred to as the "AGREEMENT"), by and between the Town of Greenwich, Connecticut, acting through Greenwich Public Schools hereunto duly authorized, "OWNER" and , acting through Greenwich Public Schools hereunto duly authorized, whose principal office is located at acting herein by , duly authorized, "CONTRACTOR".

WITNESSETH, that the parties to these presents, each in consideration of the undertaking, promises and agreements on the part of the other herein contained, have undertaken, promised and agreed to do hereby undertake, promise and agree, the Owner for itself, its successors and assigns, and the Contractor for himself and his heirs, executors, administrators, successors and assigns, as follows:

1. DEFINITIONS:

Wherever the words hereinafter defined or pronouns used in their stead occur in the Contract Documents, they shall have the following meaning:

The word "Owner" shall mean the Town of Greenwich and shall include its authorized representative.

The word "Contractor" shall mean the person or organization identified as such in this Agreement and shall include his authorized representative.

The words "Contracting Officer or Agency" shall mean that official of the Town which awards the contract, executes the Agreement and is the Owner's authorized representative.

The Information for Bidders, the Contractor's Bid as accepted by the Owner, the Contract Conditions and Specifications and the General, Technical and Materials Specifications, the Drawings, and all addenda and amendments to any of the foregoing, collectively constitute the Contract Documents, and are sometimes herein referred to as the "Contract".

2. DESCRIPTION OF WORK:

3. PAYMENT:

The Contractor shall be paid on a monthly basis after presentation of vouchers, and subject to acceptance and approval by the Town of Greenwich and by , Supervisor of .

Such payments will be made by the Town of Greenwich monthly for all services actually rendered, and the acceptance by the Contractor of any such monthly payment shall be a release to the Town of all claims and all liability to the Contractor in connection with the contract, arising during the period for which payment is made. No payment, however, shall operate to release the Contractor or its sureties or insurers from any obligation under the Contract to be entered into or the Performance Bond or any insurance policies issued in connection with said contract.

4. PERFORMANCE MAINTENANCE AND PAYMENT BOND:

The Contractor shall, simultaneously with the signing of the Contract, furnish the Town the executed Performance, Maintenance and Payment Bond of a surety company authorized to do business in the State of Connecticut, and acceptable to the Town, in the sum of the full amount of the Contract obligation in the form provided by the Town.

THE ABOVE IS ONLY REQUIRED FOR CONTRACTS EXCEEDING $100,000.00.

5. GUARANTEE:

The Contractor guarantees that the Work and services to be performed, furnished, used or installed in the construction of the same, shall be free from defects and flaws, and shall be performed and furnished in strict accordance with the Drawings, if any, Specifications, and other Contract Documents, that the strength of all parts of all manufactured equipment shall be adequate and as specified and that the performance test requirements of the Contract shall be fulfilled. This guarantee shall be for a period of one year from and after the date of completion and acceptance of the Work as stated in the final estimate. The Contractor shall repair, correct or replace as required, promptly and without charge, all work, equipment and material, or parts thereof, which fail to meet the above guarantee or which in any way fail to comply with or fail to be in strict accordance with the terms and provisions and requirements of the Contract during such one-year period, and also shall repair, correct, or replace all damage to the Work resulting from such failure.

6. DEFECTIVE WORK:

The inspection of the Work shall not relieve the Contractor of any of his obligations to perform and complete the Work as required by the Contract. Defective work shall be corrected and unsuitable materials, equipment apparatus and other items shall be replaced by the Contractor, notwithstanding that such work, materials, equipment, apparatus and other items may have been previously overlooked or accepted or

estimated for payment. If the work or any part thereof shall be found defective at any time before the final acceptance of the work, the Contractor shall forthwith make good such defect in a manner satisfactory to the Town; if any material, equipment, apparatus or other items brought upon the site for use or incorporation in the work, or selected for the same, is condemned by the Town as unsuitable or not in conformity with the Specifications or any of the other Contract Documents, the Contractor shall forthwith remove such materials, equipment, apparatus and other items from the site of the Work and shall at his own cost and expense make good and replace the same and any material furnished by the Town which shall be damaged or rendered defective by the handling or improper installation by the Contractor, his agents, servants, employees or subcontractors.

7. COMPLIANCE WITH LAWS:

The Contractor shall keep himself fully informed of all existing and future federal, state and local laws, ordinances, rules and regulations affecting those engaged or employed on the work, the materials and equipment used in the work or the conduct of the work, and of all orders, decrees and other requirements of bodies or tribunals having any jurisdiction or authority over the same. If any discrepancy or inconsistency is discovered in the Drawings, if any, Specifications or other Contract Documents in relation to any such law, ordinance, rule, regulation, order, decree or other requirement, the Contractor shall forthwith report the same to the Town in writing. The Contractor shall at all times observe and comply with, and cause all his agents, servants, employees and subcontractors to observe and comply with all such existing and future laws, ordinances, rules, regulations, orders, decrees and other requirements, and he shall protect, indemnify and save harmless the Town, its officers, agents, servants and employees from and against any and all claims, demands, suits proceedings, liabilities, judgments, penalties, losses, damages costs and expenses, including attorneys' fees, arising from or based upon any violation or claimed violation of any such law, ordinance, rule, regulation, order, decree or other requirement, whether committed by the Contractor or any of his agents, servants, employees or subcontractors.

8. INDEMNITY:

The Contractor shall indemnify and save harmless the Town and its officers, agents, servants and employees, from and against any and all claims, demands, suits, proceedings, liabilities, judgments, awards, losses, damages, costs and expenses, including attorneys' fees, on account of bodily injury, sickness, disease or death sustained by any person or persons or injury or damage to or destruction of any property, directly or indirectly arising out of, relating to or in connection with the Work, whether or not due or claimed to be due in whole or in part to the active, passive or concurrent negligence or fault of the Contractor, his officers, agents, servants or employees, any of his subcontractors, the Town any of his respective officers, agents, servants or employees and/or any other person or persons, and whether or not such claims, demands, suits or proceedings are just, unjust, groundless, false or fraudulent; and the Contractor shall and does hereby assume and agrees to pay for the defense of all such claims, demands, suits and proceedings; and provided that the Contractor shall not be required to indemnify the Town, its officers, agents, servants or employees against any such damages occasioned solely by acts or omissions of the Town other than supervisory acts or omissions of the Town in connection with the Work.

INDEMNITY AGAINST SUBCONTRACTORS' CLAIMS:

If any other contractor or any subcontractor of any such other contractor shall suffer or claim to have suffered loss, damage or delay by reason of the acts or omissions of the Contractor or of any of his subcontractors, the Contractor agrees to assume the defense against any such claim and to reimburse such other contractor or subcontractor for such loss or damage. The Contractor agrees to and does hereby indemnify and save harmless the Town from and against any and all claims by such other contractors or subcontractors, alleging such loss, damage or delay and from and against any and all claims, demands, suits, proceedings, liabilities, judgments, awards, losses, damages, costs and expenses including attorneys' fees, arising out of, relating to or resulting from such claims.

9. PATENTS:

The Contractor shall indemnify and save harmless the Town and all persons acting for or on behalf of the Town from all claims and liability of any nature or kind, and all damages, costs and expenses, including attorneys' fees, arising from or occasioned by an infringement or alleged infringement of any patents or patent rights on any invention, process, materials, equipment, article, or apparatus, or any part hereof, furnished and installed by the Contractor, or arising from or occasioned by the use or manufacture thereof, including their use by the Town.

10. CHANGES:

The Town, through its designated Agent, may make changes in the Work and in the Drawings, if any, and Specifications therefore by making alterations therein, additions, thereto or omissions there from. All work resulting from such changes shall be performed and furnished under and pursuant to the terms and conditions of the Contract. If such changes result in an increase or decrease in the Work to be done hereunder, or increase or decrease the quantities thereof, adjustment in compensation shall be made therefore. For eliminated or decreased work the Contractor shall allow the Town a reasonable credit as determined by the Parties. Except in an emergency endangering life or property, no change shall be made unless in pursuance of a written order from the Town authorizing the change, and no claim for additional compensation shall be valid unless the change is so ordered.

The Contractor agrees that he shall neither have nor assert any claim for or be entitled to any additional compensation for damages or for loss of anticipated profits on work that is eliminated.

11. CLAIMS FOR DAMAGES:

If the Contractor makes claim for any damages alleged to have been sustained by breach of contract or otherwise, he shall, within ten (10) days after occurrence of the alleged breach or within ten (10) days after such damages are alleged to have been sustained whichever date is the earlier, file with the Contracting Officer a written, itemized statement of the details of the alleged breach and the details and amount of the alleged

damages. The Contractor agrees that unless such statement is made and filed as so required, his claim for damages shall be deemed waived, invalid and unenforceable, and that he shall not be entitled to any compensation for any such alleged damages. Within ten (10) days after the timely filing of such statement, the Contracting Officer shall file with the appropriate department of the Town, one copy of the statement, and shall file with the Town and the Contractor his determination thereon. The Contractor shall not be entitled to claim any additional compensation for damages by reason of any direction, instruction, determination or decision of the Town or its agents, nor shall any such claims be considered, unless the Contractor shall have complied in all respects with the provisions of this paragraph.

12. ABANDONMENT OF THE WORK OR OTHER DEFAULT:

If the Work shall be abandoned, or any part thereof shall be sublet without previous written consent of the Town, or the Contract or any moneys payable hereunder shall be assigned otherwise than as herein specified, or if at any time the Contracting Officer shall be of the opinion, and shall so certify in writing, that the conditions herein specified as to rate of progress are not being complied with, or that the Work or any part thereof is being unnecessarily or unreasonably delayed, or that the Contractor has violated or is in default under any of the provisions of the Contract, or if the Contractor becomes bankrupt or insolvent or goes or is put into liquidation or dissolution, either voluntarily or involuntarily, or petitions for an arrangement or reorganization under the Bankruptcy Act, or makes a general assignment for the benefit of creditors or otherwise acknowledges insolvency, the happening of any of which shall be and constitute a default under the Contract, the Town may notify the Contractor in writing, with a copy of such notice mailed to the surety, to discontinue all Work or any part thereof; thereupon the Contractor shall discontinue such Work or such part thereof as the Town may designate; and the Town may, upon giving such notice, by Contract or otherwise as it may determine, complete the Work or such part thereof and charge the entire cost and expense of so completing the work. The Town shall be entitled to reimbursement from the Contractor and the Contractor agrees to pay to the Town any losses, damages, costs and expenses, including attorneys' fees, sustained or incurred by the Town by reason of any of the foregoing causes. For the purpose of such completion the Town may for itself or for any Contractors employed by the Town take possession of and use or cause to be used any and all materials, equipment, plant, machinery, appliances, tools, supplies and such other items of every description that may be found or located at the site of the Work.

All costs, expenses, losses, damages, attorneys' fees, and any and all other charges incurred by the Town under this subsection shall be charged against the Contractor and deducted and/or paid by the Town out of any moneys due and payable or to become due or payable under the Contract to the Contractor; in computing the amounts chargeable to the Contractor, the Town shall not be held to a basis of the lowest prices for which the completion of the Work or any part thereof might have been accomplished, but all sums actually paid or obligated therefore to effect its prompt completion shall be charged to and against the account of the Contractor. In case the costs, expenses, losses, damages, attorneys' fees and other charges together with all payments theretofore made to or for the account of the Contractor are less than the sum which would have been payable under the Contract if the Work had been properly performed and completed by

the Contractor, the Contractor shall be entitled to receive the difference, and, and in case such costs, expenses, losses, damages, attorneys' fees and other charges, together with all payments theretofore made to or for the account of the Contractor, shall exceed the said sum, the Contractor shall pay the amount of the excess to the Town.

13. LIENS:

If at any time any notices of lien or other legal process are filed for labor performed or materials or equipment manufactured, furnished, or delivered to or for the Work, the Contractor shall, at its own cost and expense, promptly discharge, remove or otherwise dispose of the same, and until such discharge, removal or disposition, the Town shall have the right to retain from any moneys payable hereunder an amount which, in its sole judgment, it deems necessary to satisfy such liens and pay the costs and expenses, including attorneys' fees, of defending any actions brought to enforce the same, or incurred in connection therewith or by reason thereof.

14. CLAIMS:

If at any time there be any evidence of any claims for which the Contractor is or may be liable or responsible hereunder, the Contractor shall promptly settle or otherwise dispose of the same, and until such claims are settled or disposed of, the Town may retain from any moneys which would otherwise be payable hereunder so much thereof as, in its sole judgment, it may deem necessary to settle or otherwise dispose of such claims and to pay the costs and expenses, including attorneys' fees, of defending any actions brought to enforce such claims or incurred in connection therewith or by reason thereof.

15. LIABILITY OF TOWN:

No person, firm or corporation, other than the Contractor, who signed this Contract as such, shall have any interest herein or rights hereunder. No claim shall be made or be valid either against the Town or any agent of the Town and neither the Town nor any agent of the Town shall be liable for or be held to pay any money, except as herein provided. The acceptance by the Contractor of the payment as fixed in the final estimate shall operate as and shall be a full and complete release of the Town and of every agent of the Town of and from any and all claims, demands, damages and liabilities of, by or to the Contractor for anything done or furnished for or arising out of or relating to or by reason of the Work or for or on account of any act or neglect of the Town or of any agent of the Town or of any other person, arising out of, relating to or by reason of the Work, except the claim against the Town for the unpaid balance, if any there be, of the amounts retained as herein provided.

16. PROVISIONS REQUIRED BY LAW DEEMED INSERTED:

Each and every provision of law and clause required by law to be inserted in the Contract shall be deemed to be inserted herein, and the Contract shall be read and enforced as though they were included herein. If through mistake or otherwise any such provision is not inserted, or is not correctly inserted, then upon the application of either party, the Contract shall forthwith be physically amended to make such insertion.

17... PERMITS:

The Contractor shall, at his own expense, take out and maintain all necessary permits from the State, Town, or other public authorities; shall give all notices required by law; and shall post all bonds and pay all fees and charges incident to the due and lawful prosecution of the Work.

18. NOT TO SUBLET OR ASSIGN:

The Contractor shall constantly give his personal attention to the faithful prosecution of the Work, shall keep the same under his personal control, shall not assign the Contract or sublet the Work or any part thereof without the previous written consent of the Town, and shall not assign any of the moneys payable under the Contract, or his claim thereto, unless by and with the like written consent of the Town and the surety on the Contract Bonds. Any assignment or subletting in violation hereof shall be void and unenforceable.

19. EMPLOY COMPETENT PEOPLE:

The Contractor shall employ only competent people on the Work and shall not employ people or means which may cause strikes, work stoppages and/or disturbances by workmen employed by the Contractor, any subcontractor, the Town, the Contracting Officer or any other contractor. Whenever the Contracting Officer notifies the Contractor in writing that in his opinion any person on the Work is incompetent, unfaithful, disorderly, or otherwise unsatisfactory or not employed in accordance with the provisions of the Contract, such person shall be discharged from the Work and shall not again be employed on it, except with the written consent of the Contracting Officer.

20. EMPLOY SUFFICIENT LABOR AND EQUIPMENT:

If in the sole judgment of the Contracting Officer the Contractor is not employing sufficient labor, plant, equipment or other means to complete the Work within the time specified, the Contracting Officer may, after giving written notice, require the Contractor to employ such additional labor, plant, equipment and other means as the Contracting Officer deems necessary to enable the Work to progress properly.

21. INTOXICATING LIQUORS:

The Contractor shall not sell and shall neither permit nor suffer the introduction or use of intoxicating liquors upon or about the Work.

22. ACCESS TO WORK:

The Town, the Contracting Officer, and their officers, agents, servants and employees may at any and all times and for any and all purposes, enter upon the Work and the site thereof and the premises used by the Contractor, and the Contractor shall at all times provide safe and proper facilities therefore.

23. EXAMINATION OF WORK:

The Contracting Officer shall be furnished by the Contractor with every reason able facility for examining and inspecting the Work and for ascertaining that the Work is being performed in accordance with the requirements and intent of the Contract, even to the extent of requiring the uncovering or taking down portions of finished work by the Contractor.

24. EXTRA WORK:

The Contractor shall perform any extra work (work in connection with the Contract but not provided for herein) when and as ordered in writing by the Contracting Officer, at the unit prices stipulated in the Contract for such work or, if none are so stipulated, either (a) at the price agreed upon before such work is commenced and named in the written order for such work, or (b) if the Contracting Officer so elects, for the reasonable cost of such work, as determined by the Contractor and approved by the Contracting Officer, plus a percentage of such cost, as may be agreed upon by Contract and Contracting Officer.

25. CHANGES NOT TO AFFECT BONDS:

It is distinctly agreed and understood that any changes made in the work or the Drawings or Specifications therefore (whether such changes increase or decrease the amount thereof or the time required for its performance) or any changes in the manner or time of payments made by the Town to the Contractor, or any other modifications of the Contract, shall in no way annul, release, diminish or affect the liability of the surety on the Contract Bonds given by the Contractor, it being the intent hereof that notwithstanding such changes the liability of the surety on said bonds continue and remain in full force and effect.

26. PRICES FOR WORK:

The Town shall pay and the Contractor shall receive the prices stipulated in the Bid made a part hereof as full compensation for everything performed and furnished and for all risks and obligations undertaken by the Contractor under and as required by the Contract.

27. MONEYS MAY BE RETAINED:

The Town may at any time retain from any moneys which would otherwise be payable hereunder so much thereof as the Town may deem necessary to complete the Work hereunder and to reimburse it for all costs, expenses, losses, damage and damages chargeable to the Contractor hereunder.

28. USE OR PARTIAL PAYMENT NOT ACCEPTANCE:

It is agreed that this is an entire contract for one whole and complete Work or result and that neither the Town's entrance upon or use of the Work or any part thereof nor any partial payments by the Town shall constitute an acceptance of the Work or any part thereof before its entire completion and final acceptance.

p29. NON-CONNECTICUT CONTRACTORS:

Pursuant to Connecticut General Statutes §12-430(7), as amended by Connecticut Public Act #11-61, Section 66, a nonresident contractor shall comply with the State of Connecticut's bonding requirements.

30. PAYMENT TO SUBCONTRACTORS:

As required by Section 49-41a of the Connecticut General Statutes, within thirty days after payment to the Contractor by the Town for work under this Contract, he shall pay any amounts due any subcontractor, whether for labor performed or materials furnished when such labor or materials has been included in a requisition submitted by such Contractor and paid by the Town.

31. INSURANCE:

Insurance coverage required as noted in "Exhibit A" attached.

32. PREVAILING WAGE RATES; CONSTRUCTION SAFETY AND HEALTH COURSE:

Except as noted below, the Contractor shall comply with the current provisions of Section 31-53 of the General Statutes of the State of Connecticut, a part of which is quoted as follows:

"The wages paid on an hourly basis to any person performing the work of any mechanic, laborer or worker on the work herein contracted to be done and the amount of payment or contribution paid or payable on behalf of each such person to any employee or welfare fund, as defined in subsection (h) of section 31-53 of the General Statutes, shall be at a rate equal to the rate customary or prevailing for the same work in the same trade or occupation in the town in which such public works project is being constructed. Any contractor who is not obligated by agreement to make payment or contribution on behalf of such persons to any such employee welfare fund shall pay to each mechanic, laborer or worker as part of such person's wages the amount of payment or contribution for such person's classification on each pay day."

All Contractors and subcontractors shall submit certified weekly payrolls, on forms furnished by the Town, for all contracts meeting the aforementioned monetary limits. The certified payrolls shall be submitted with the Contractor's monthly certificate for payment.

Section 31-55a of the General Statutes of the State of Connecticut provides that the prevailing wage rates applicable to any awarded contract or subcontract are subject to annual adjustments each July 1st for the duration of the project.

Each Contractor that is awarded a contract shall pay the annual adjusted prevailing wage rate that is in effect each July 1st, as posted by the Department of Labor. It is the Contractor's responsibility to obtain the annual adjusted prevailing wage rate increases directly from the Department of Labor's web site. The annual adjustments will be posted on the Department's of Labor web page: www.ctdol.state.ct.us. For those without Internet access, contact the division listed below.

The Contractor shall also furnish proof with the weekly certified payroll for the first week each employee begins work that any person performing the work of a mechanic, laborer or worker has completed a course of at least ten (10) hours in duration in construction safety and health approved by the federal Occupational Safety and Health Administration in accordance with Connecticut General Statutes Section 31-53b and regulations adopted by the State of Connecticut Labor Commissioner.

The provisions of this section (32) shall not apply where the total cost of all work to be performed by all Contractors and subcontractors in connection with new construction of any public works project is less than four hundred thousand dollars ($400,000) or where the total cost of all work to be performed by all contractors and subcontractors in connection with any remodeling, refinishing, refurbishing, rehabilitation, alteration or repair of any public works project is less than one hundred thousand dollars ($100,000).

Questions can be directed to the Contract Compliance Unit, Wage and Workplace Standards Division, Connecticut Department of Labor, 200 Folly Brook Blvd., Wethersfield, CT 06109 at 860-263-6790.

33. GOVERNING LAW:

The laws of the State of Connecticut shall govern this Contract and any and all litigation related to this Contract. In the event of litigation related to this Contract, the exclusive forum shall be the State of Connecticut and the exclusive venue for such litigation shall be the Judicial District for Stamford/Norwalk at Stamford.

IN WITNESS, WHEREOF, the parties of the AGREEMENT have hereunto set their hand and seals the day first above written.

TOWN OF GREENWICH, CONNECTICUT BY_

THE CONTRACTOR

BY_____

(SAMPLE ENDORSEMENT LETTER)

AGENT/BROKER
(LETTERHEAD)

(Date)

Eugene H. Watts, Senior Buyer
Purchasing Department
Town of Greenwich/Board of Education
290 Greenwich Avenue – Havemeyer Building
Greenwich, CT 06830

Re: Company Name
Town of Greenwich / Board of Education / Contract # XXXX

Dear Mr. Watts:

The undersigned hereby certifies as follows:

(1) I am a duly licensed insurance agent under the laws of the State of **[insert State]** and an authorized representative of all companies affording coverage under the Acord form submitted herewith;

(2) The Town of Greenwich / Board of Education has been endorsed as an additional insured under the general liability policy no. [insert policy number], issued by **[insert company affording coverage] to [name of insured]**;

(3) The general liability policy referenced in paragraph (2) above meets or exceeds the coverage in Commercial General Liability ISO form CG 00 01 10 01, including contractual liability;

(4) The policies listed in the Acord form submitted to the Town of Greenwich in connection with the above-referenced contract have been issued to the insured in the amounts stated and for the periods indicated in the Acord form; and

(5) The Town of Greenwich shall be given thirty (30) days prior written notice of cancellation, lapse or restrictive amendment (except ten days notice of nonpayment) of the policies listed in the Acord form.

Sincerely,

Authorized Representative for all companies listed in the Acord form
(Acord & Endorsement Letter must be signed by the same individual)

ACORD

CERTIFICATE OF LIABILITY INSURANCE

PRODUCER	THIS CERTIFICATE IS ISSUED AS A MATTER OF INFORMATION ONLY AND CONFERS NO RIGHTS UPON THE CERTIFICATE HOLDER, THIS CERTIFICATE DOES NOT AMEND, EXTEND OR ALTER THE COVERAGE AFFORDED BY THE POLICIES BELOW.
	INSUREERS AFFORDING COVERAGE
INSURED	INSURER A:
	INSURER B:
	INSURER C:
	INSURER D:
	INSURER E:

COVERAGES

THE POLICIES OF INSURANCE LISTED BELOW HAVE BEEN ISSUED TO THE INSURED NAMED ABOVE FOR THE POLICY PERIOD INDICATED, NOTWITHSTANDING ANY REQUIREMENT, TERM OF CONDITION OF ANY CONTRACT OR OTHER DOCUMENT WITH RESPECT TO WHICH THIS CERTIFICATE MAY BE ISSUED OR MAY PERTAIN, THE INSURANCE AFFORDED BY THE POLICIES DESCRIBED HEREIN IS SUBJECT TO ALL THE TERMS, EXCLUSIONS AND CONDITIONS OF SUCH POLICIES. LIMITS SHOWN MAY HAVE BEEN REDUCED BY PAID CLAIMS.

INSR	TYPE OF INSURANCE	POLICY NUMBER	POLICY EFFECTIVE DATE(MM/DD/YY)	POLICY EXPIRATION DATE(MM/DD/YY)	LIMITS	
	GENERAL LIABILITY COMMERCIAL GENERAL LIABILITY ☐ CLAIMS MADE ☒ OCCUR ☐_____ ☐_____ GENERAL AGGREGATE LIMIT APPLIES PER: ☐ POLICY ☐PROJECT ☐ LOC				EACH OCCURRENCE	$1,000,000
					FIRE DAMAGE (Any one fire)	
					MED EXP (Any one person)	
					PERSONAL & ADV INJURY	
					GENERAL AGGRREGATE	$2,000,000
					PRODUCTS-COMP/OP AGG	
	AUTOMOBILE LIABILITY ☐ ANY AUTO ALL OWNED AUTOS ANY PROPRIETOR/PARTNER/EXECUTIVE SCHEDULED AUTOS HIRED AUTOS NON-OWNED AUTOS ☐_____ ☐				COMBINED SINGLE LIMIT (Ea accident)	$1,000,000
					BODILY INJURY (Per person)	
					BODILY INJURY (Per accident)	
					PROPERTY DAMAGE (Per accident)	
	GARAGE LIABILITY ☐ ANY AUTO ☐				AUTO ONLY-EA ACCIDENT	
					OTHER THAN AUTO ONLY:	EA ACC AGG
	EXCESS LIABILITY ☐ OCCUR ☐ CLAIMS MADE ☐ DEDUCTIBLE ☐ RETENTION $				EACH OCCURRENCE	$5,000,000
					AGGREGATE	$5,000,000
	WORKERS COMPENSATION AND EMPLOYERS' LIABILITY ANY PROPRIETOR/PARTNER/EXECUTIVE OFFICER/MEMBER EXCLUDED? Y/N ☐ (Mandatory in NH) If yes, describe under DESCRIPTION OF OPERATION below)				☒ PER STATUTE ☐ OTHER	
					E.L. EACH ACCIDENT	
					E.L. DISEASE-EA EMPLOYEE	
					E.L. DISEASE – POLICY LIMIT	
	Professional Liability					

DESCRIPTION OF OPERATIONS/LOCATIONS/VEHICLES/EXCLUSIONS ADDED BY ENDORSEMENT/SPECIAL PROVISIONS

The Town of Greenwich / Board of Education are listed as additional insured for Contract No. XXXX

CERTIFICATE HOLDER	X	**ADDITIONAL INSURED; INSURER LETTER: __**	**CANCELLATION**
Town of Greenwich Board of Education 101 Field Point Road Greenwich, CT 06830			SHOULD ANY OF THE ABOVE DESCRIBED POLICIES BE CANCELLED BEFORE THE EXPIRATION DATE THEREOF, THE ISSUING COMPANY WILL ENDEAVOR TO MAIL 30 DAYS WRITTEN NOTICE TO THE CERTIFICATE HOLDER NAMED TO THE LEFT, BUT FAILURE TO DO SO SHALL IMPOSE NO OBLIGATION OR LIABILITY OF ANY KIND UPON THE INSURER, ITS AGENTS OF REPRESENTATIONS AUTHORIZED REPRESETNATIVE

Features

The High Stepper series is a pyramid-style climbing structure made of steel-loaded Nylon cables and comes protected against UV.

The 101 features **Dynamo DX Technology** which includes the highest steel content and the strongest connection materials in the industry, including a steel-wire core in our edge ropes and connection points crushed in place with over 75 tons of pressure to ensure long life of the games and maximum safety for the children.

Dynamo Nets help bring movement, balance, exercise and fun back into the playground.

Ages: 5 to 12 years
Capacity: 36 children
Size: L: 18' 7" / 5.7m
W: 18' 7" / 5.7m
H: 12' 10" / 3.9m
Use zone: L: 29' 8" / 9.0m
W: 29' 8" / 9.0m

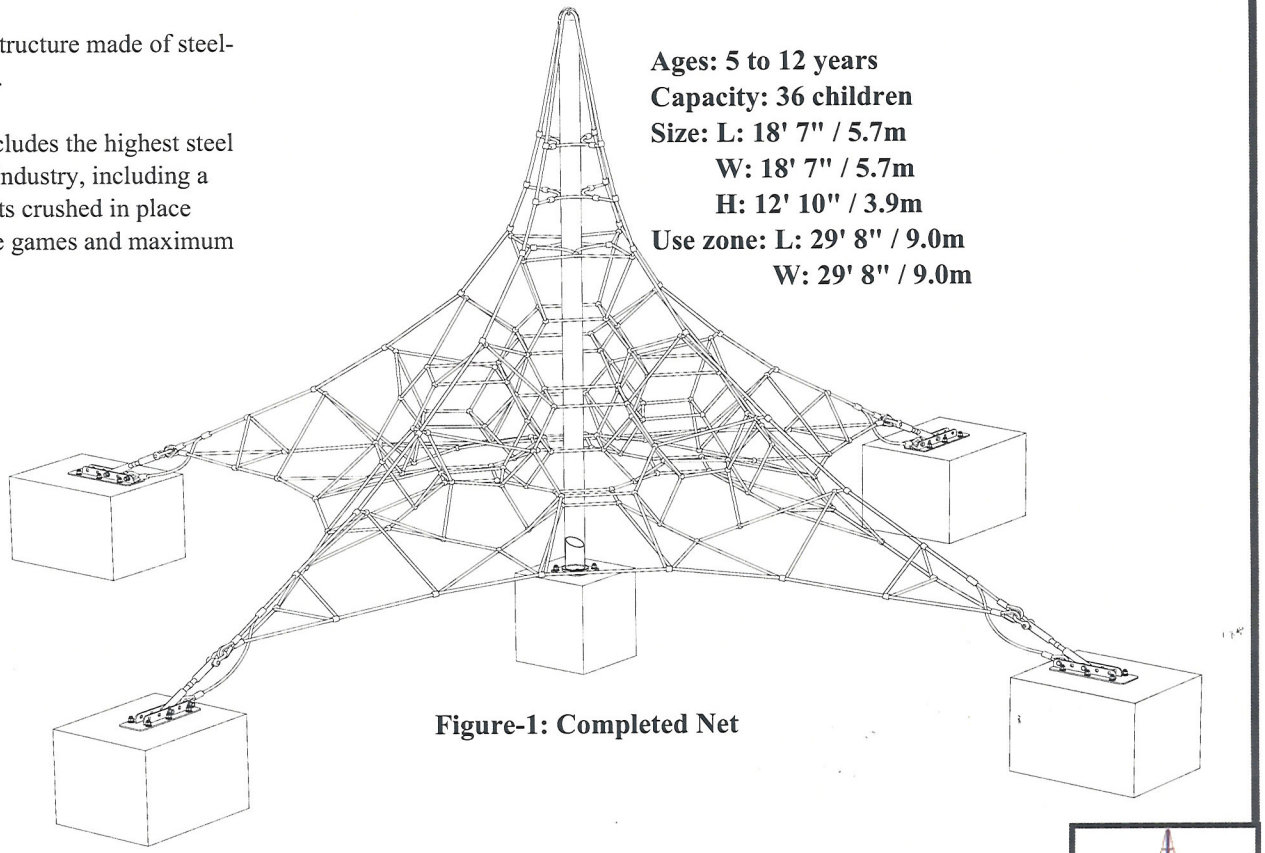

Figure-1: Completed Net

A PLAYCORE COMPANY GameTime

PRODUCT ID: 3173 High Stepper Regular

Safety area

The requirements for space and safety clearances are taken from BS-EN 1176-1 / ASTM-F1487 / CSA Z614

The use zone for stationary play equipment shall extend no less than 72 in. (1830mm) from all sides of the play structure.

Fall Height : (a) 6' / 1830mm (from surface)

The Fall height on the external surface of a pyramid shaped space net is the highest point attainable within a horizontal distance of **(b) 44" / 1100mm** from the edge of the structure where a free fall to the protective surface is possible. This distance is based on the centre of gravity height of the maximum user.

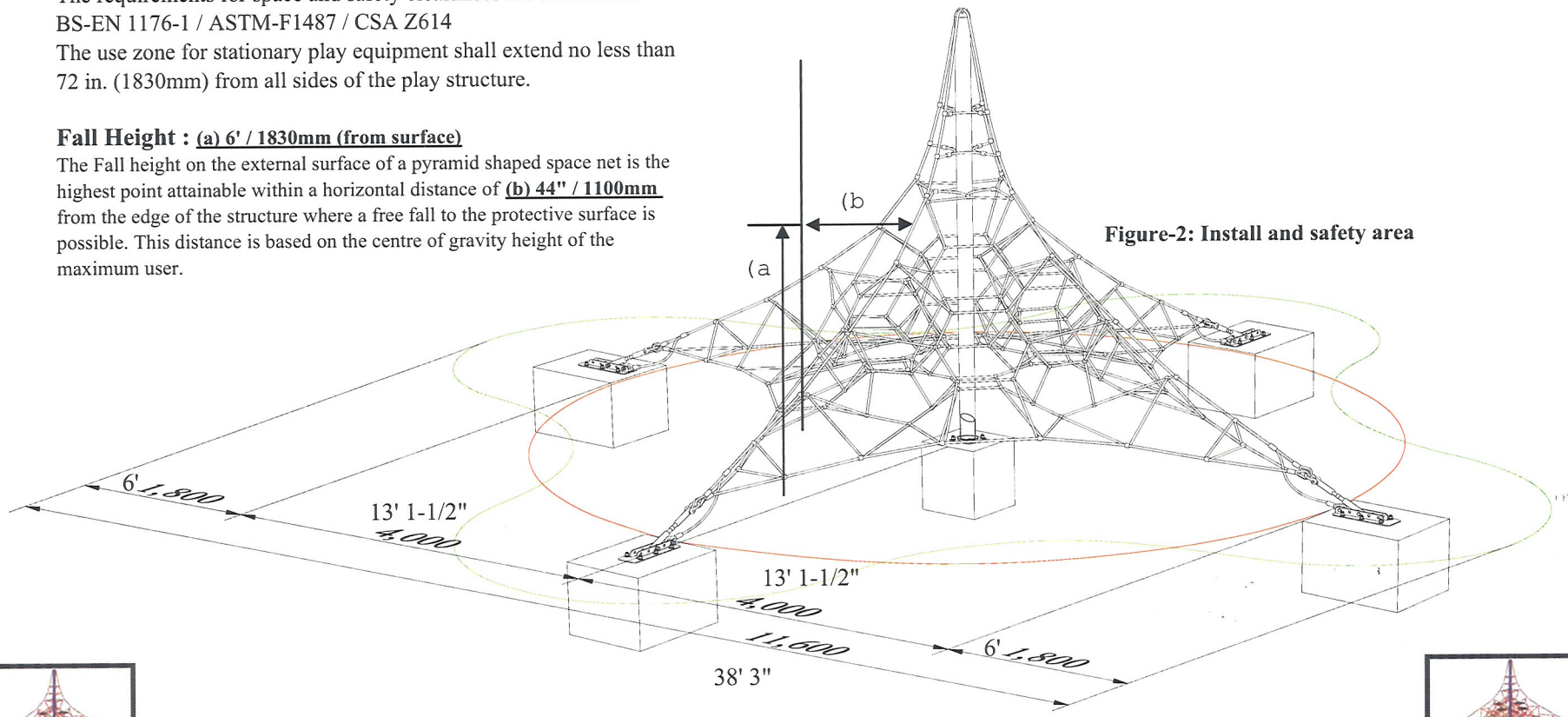

Figure-2: Install and safety area

Assemble wooden support frames *
4 frames (39-½" / 1000mm L x 31-½" / 800mm W x 31-½" / 800mm H)
1 frame (24" / 600mm L x 24" / 600mm W x 31-½" / 800mm H)

*Use ½" (min) plywood; not included in package

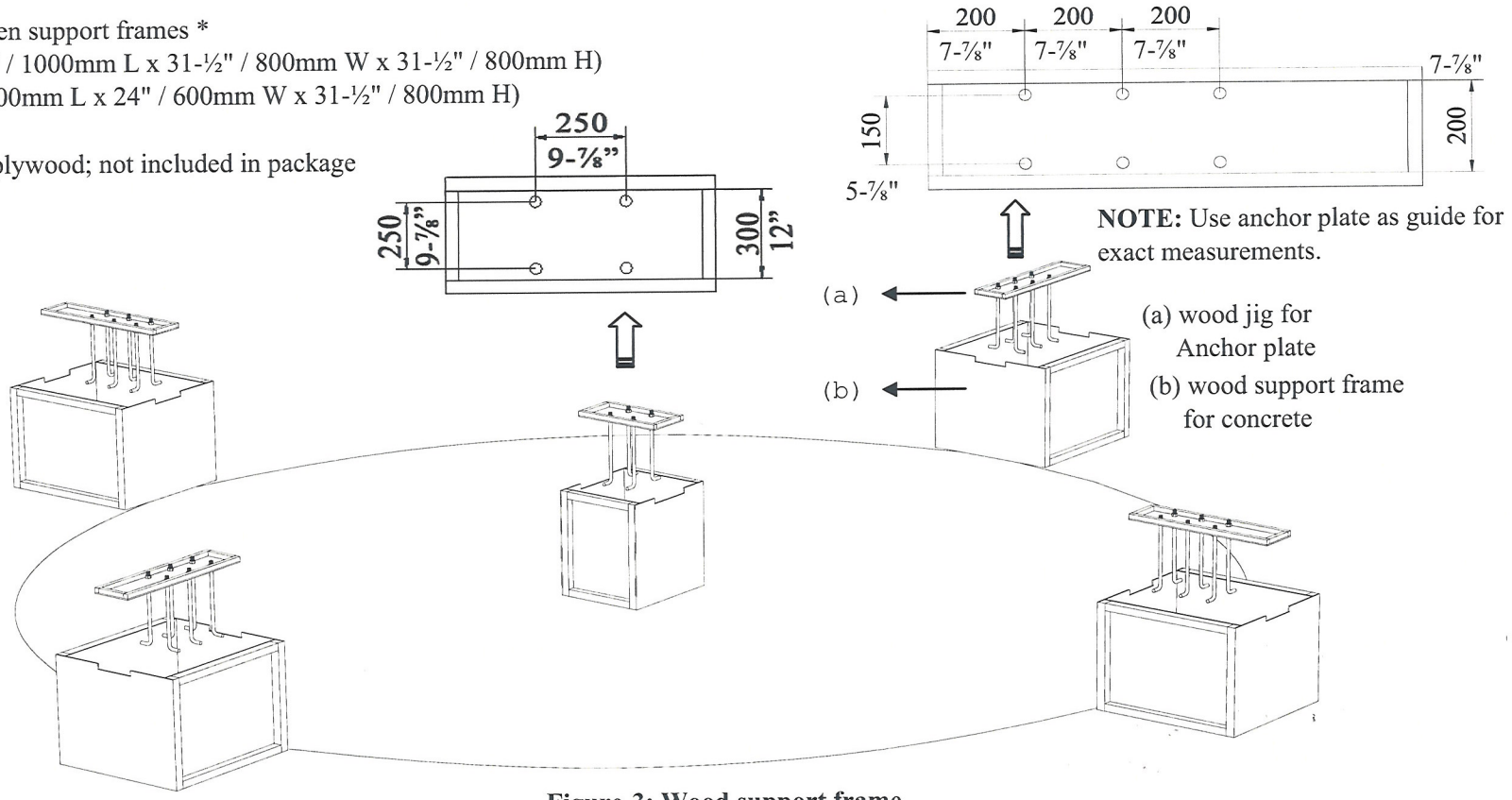

Figure-3: Wood support frame

Foundation

Please refer to #101 drawing for exact installation dimensions

Figure-5: Foundation section view

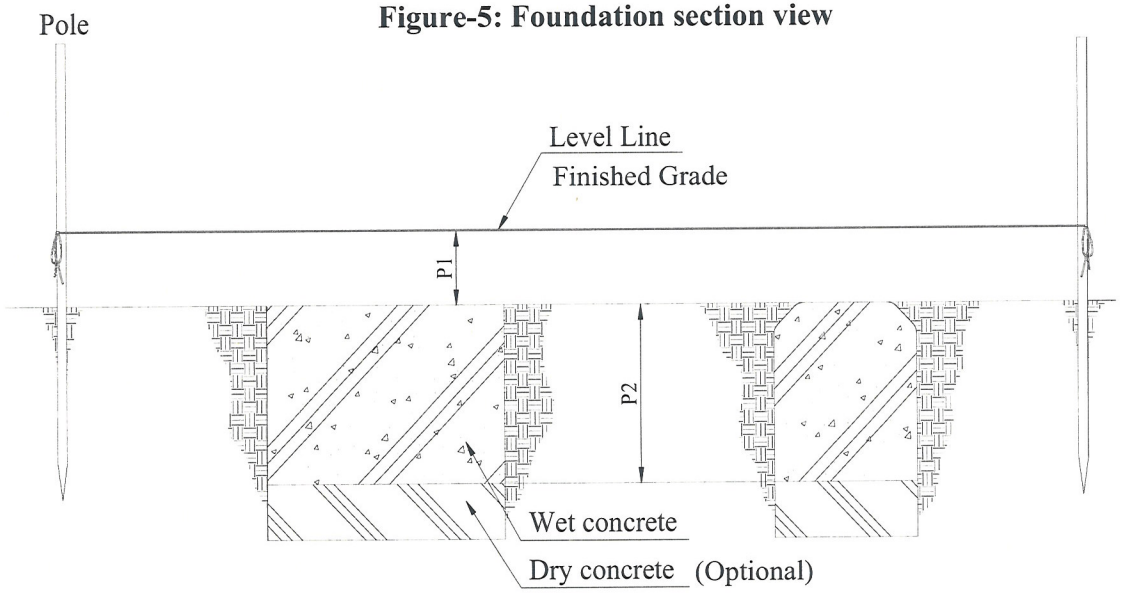

P1 = Depth below finished Grade (12" / 300mm)
P2 = Depth of concrete footing (31-½" / 800mm)

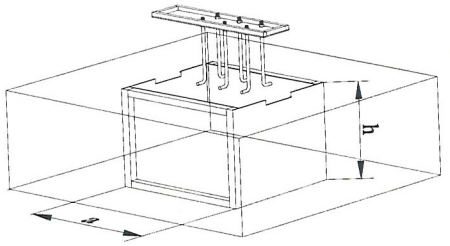

Figure-4 : Excavate enough materials to allow for proper depth of concrete footings

Also ensure that there is enough space to allow the frame to be positioned properly.

Anchor wood support frame to ground with pickets to prevent the frame from moving while concrete is poured and sets.

Figure -6 Concrete footing and Anchor plate layout

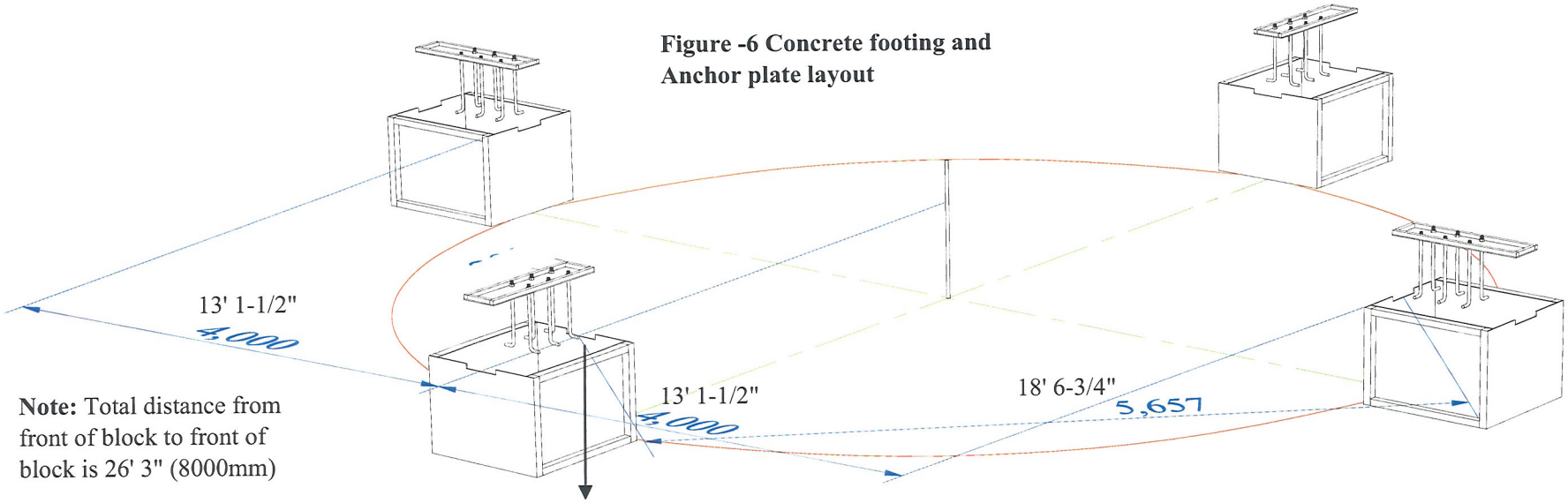

Note: Total distance from front of block to front of block is 26' 3" (8000mm)

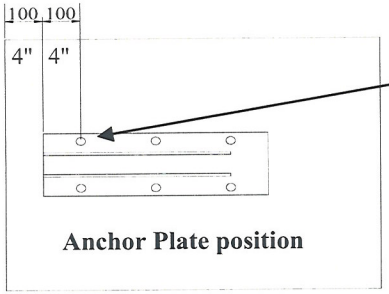

Anchor Plate position

Positioning Anchor plate on footing

[CF] 'L" anchor hole

Front edge of anchor plate must be installed 4" / 100mm from edge of concrete footing.

[Concrete]
Pour concrete* into wooden support frame until flush to top edge
Allow 3-5 days for concrete to cure before proceeding to next step.

*Concrete is to be wet concrete with minimum 25 MPa / 3500 PSI.

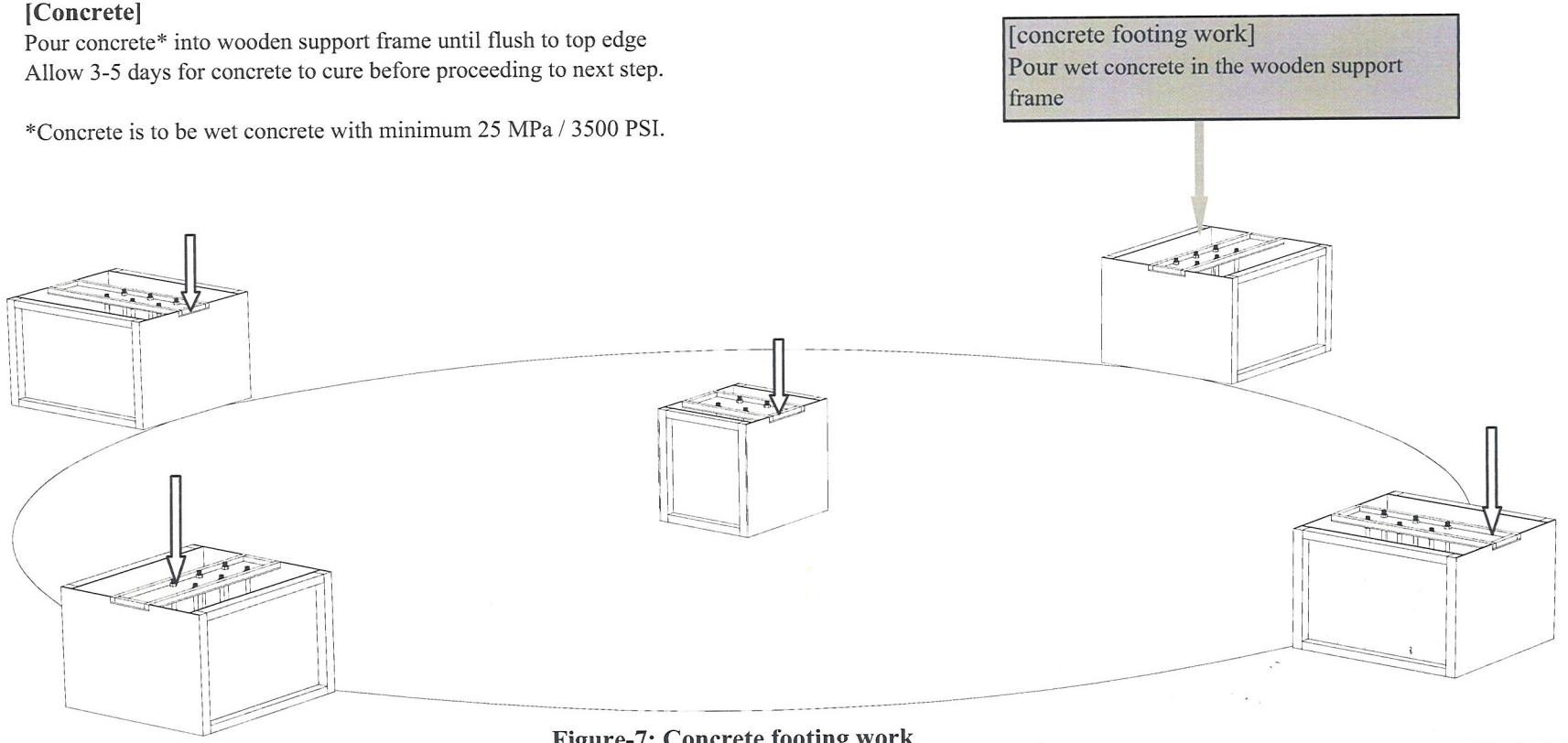

Figure-7: Concrete footing work

Remove wood support frame from dry concrete blocks

After concrete has cured enough, remove frame and replace soil in area around footing to subgrade level

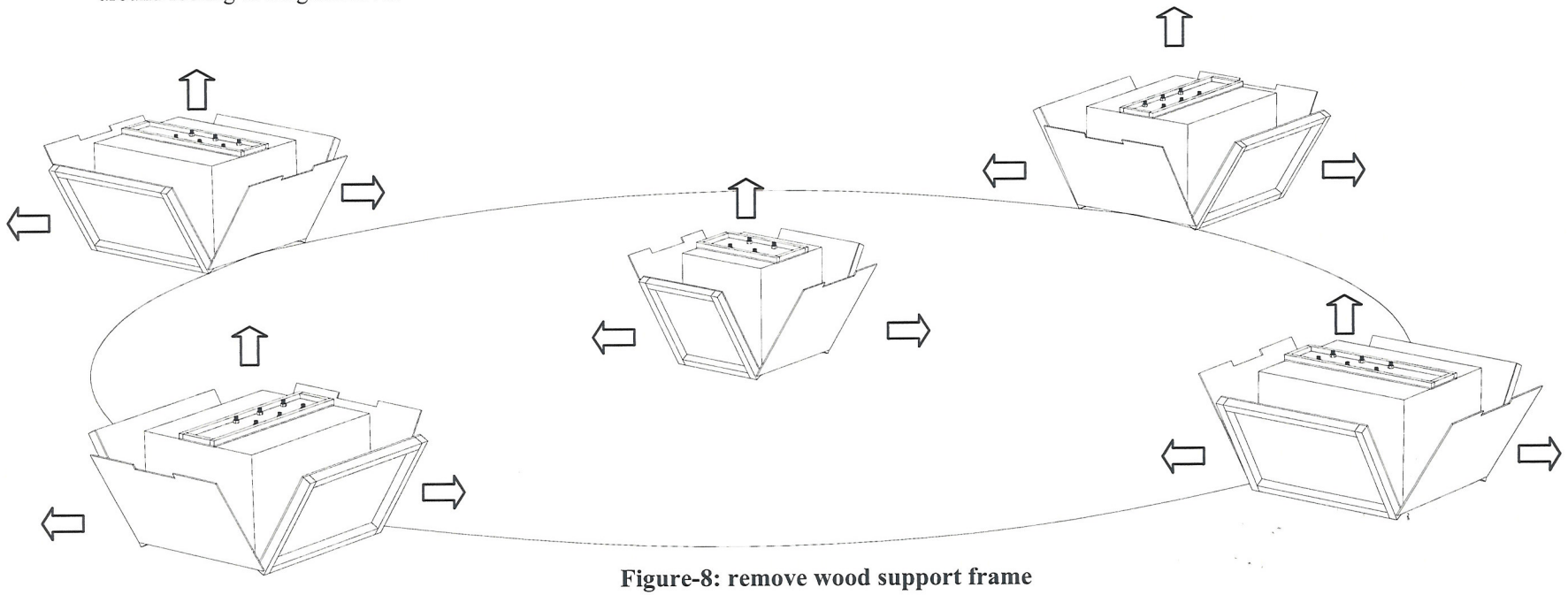

Figure-8: remove wood support frame

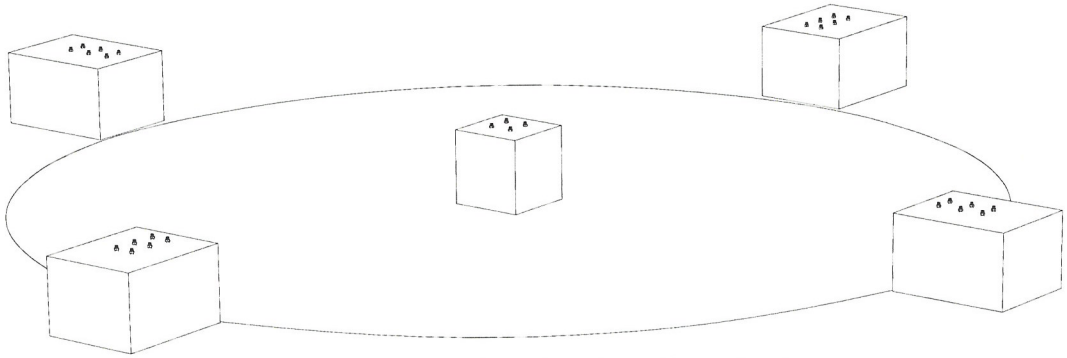

Figure-9: concreted block - clean threads of "L" anchor bolts

(a) Anchor Plate

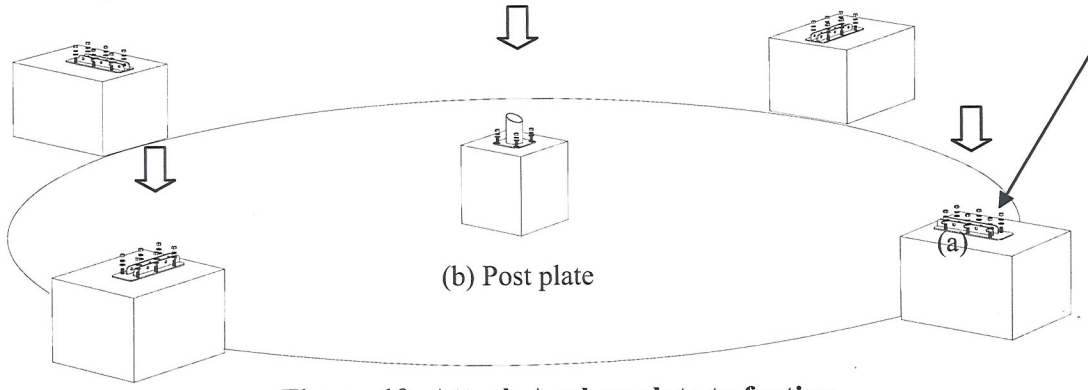

(b) Post plate

Figure-10: Attach Anchor plate to footing with flat washer, locking washer and nut.

DYNAMO INDUSTRIES

POURED IN PLACE ENCLOSURE
INSTALLATION SUPPLEMENT

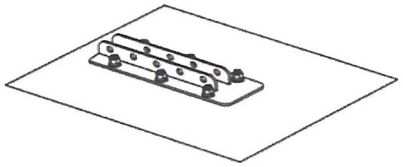

Figure A1: Anchor Plate Installed

After the anchor plates have been installed, place one Poured In Place Enclosure around each corner anchor plate. (See Figure A2)

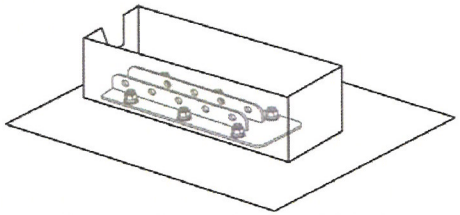

Figure A2: Enclosure Added

After the Enclosures are placed around each anchor plate, prepare sub base to subgrade level and/or top of enclosure, whichever is lower.

Install net and attach turnbuckles and safety ropes per net-specific manual. (See Figure A3)

If desired, remaining cavity inside Enclosure may be filled with loose rubber.

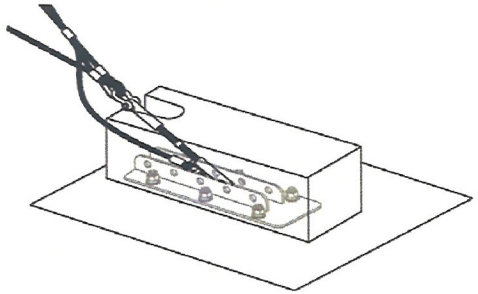

Figure A3: Turnbuckle and Safety Rope Attached

Place Enclosure lid on top of Enclosure. Insert two long bolts (provided) into holes in lid.
Coat bottom 3-4 inches (75-100mm) of threads with lubricant to prevent Poured In Place from sticking to threads.
If desired, provided rectangular steel riser can be used to demarquate location of lid and provide a seam in the rubber to improve ease of removal. Coat with lubricant to prevent Poured In Place from sticking to this as well.

Install Poured In Place Surfacing. Remove long bolts and steel riser when cured.

Save bolts for later lid removal and tensioning.

Post Assembly
Insert Post following nylon string

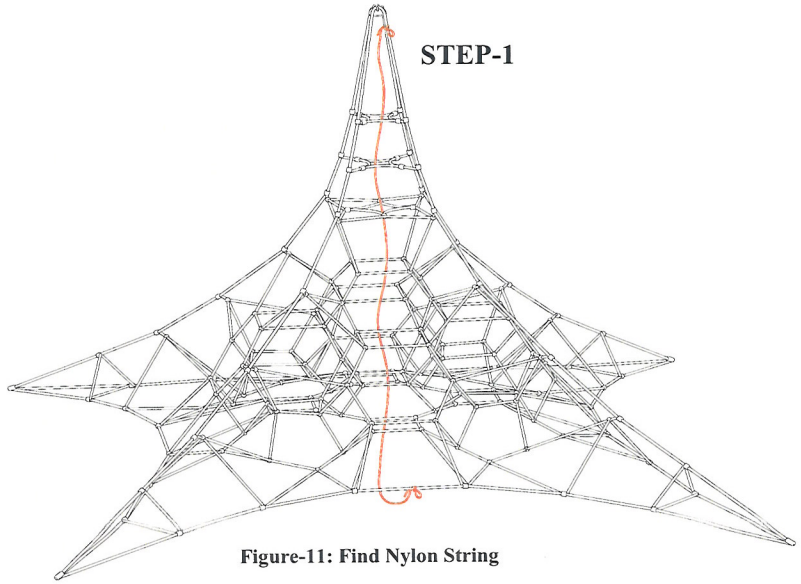

Figure-11: Find Nylon String

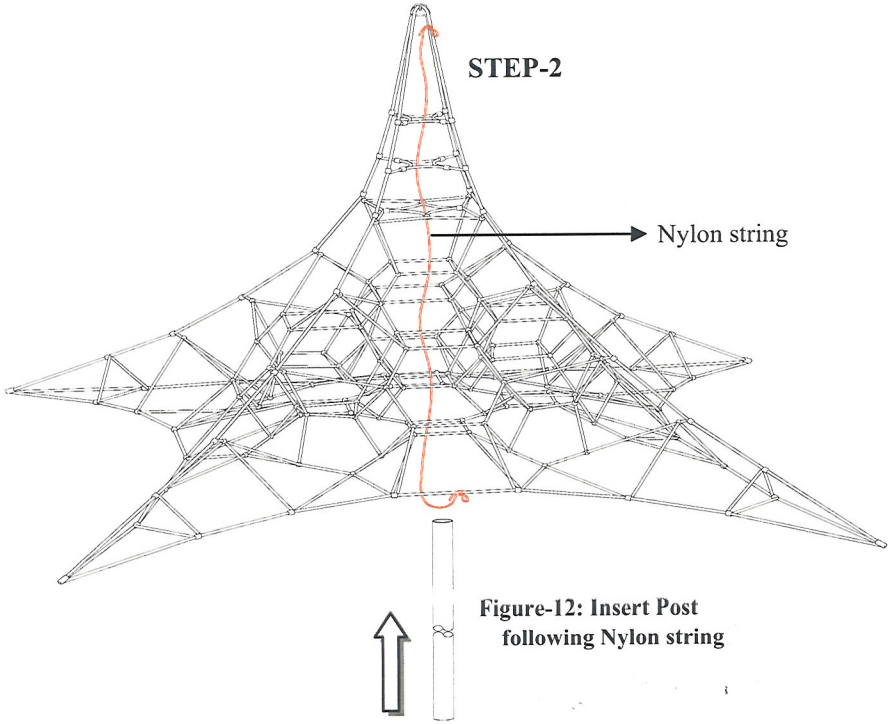

Figure-12: Insert Post following Nylon string

NOTE: Remove string prior to placing cap on post.

Place Cap on Post

Thread the mast through the net's center (per diagrams below, or following factory-installed guide string). Press the cap (already attached to the top of the net) into the mast's top end.

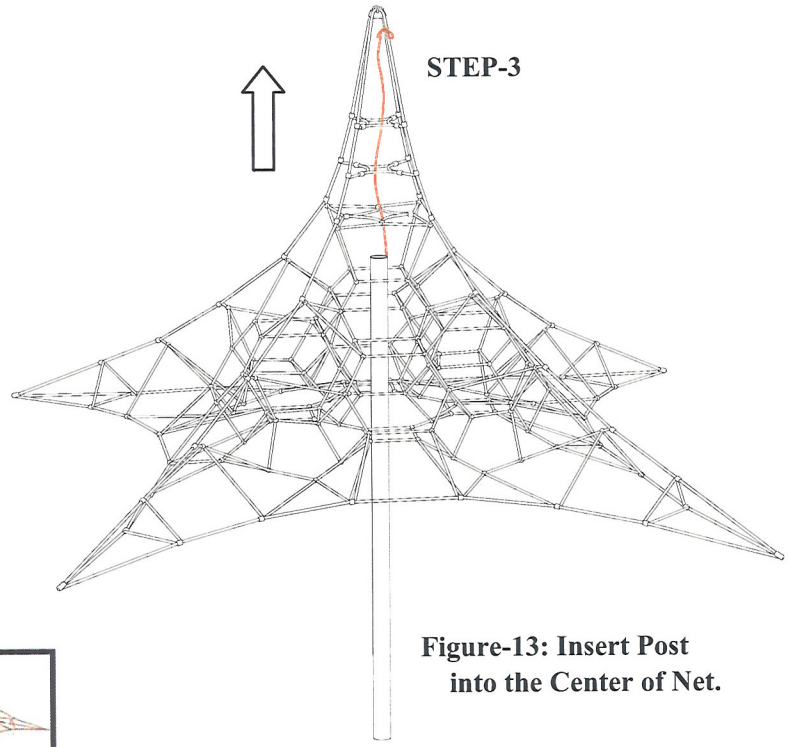

Figure-13: Insert Post into the Center of Net.

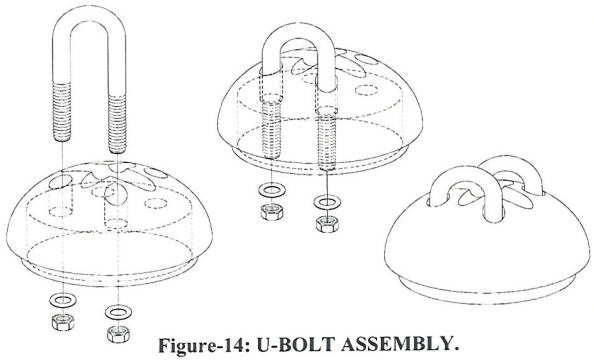

Figure-14: U-BOLT ASSEMBLY.

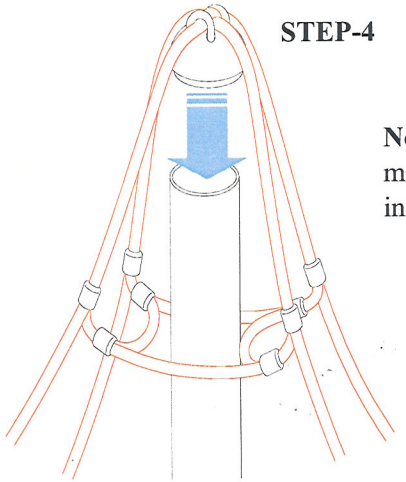

Note: Rubber mallet may be required to insert cap into post.

Figure-15: POST CAP ASSEMBLY.

Safety Cable Attaching

Attach safety cable to anchor plates (A) (B) (C) as shown in Figure 16.

(A) ⇨ (B) ⇨ (C)

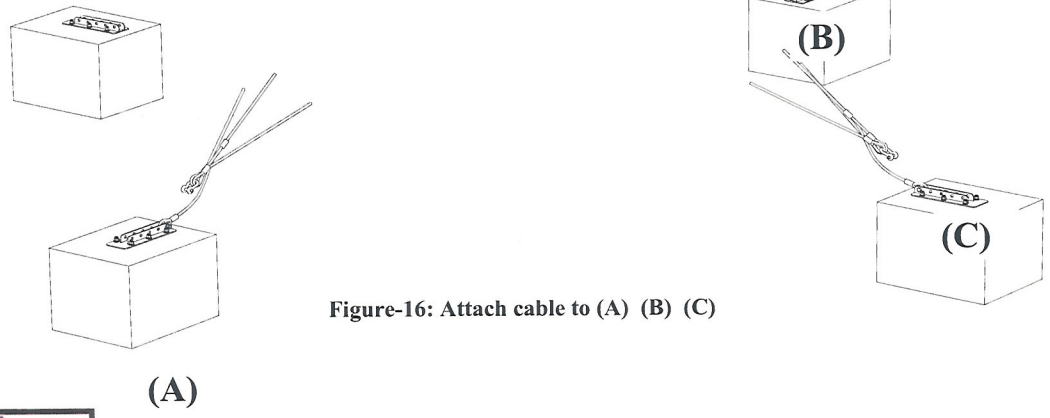

Figure-16: Attach cable to (A) (B) (C)

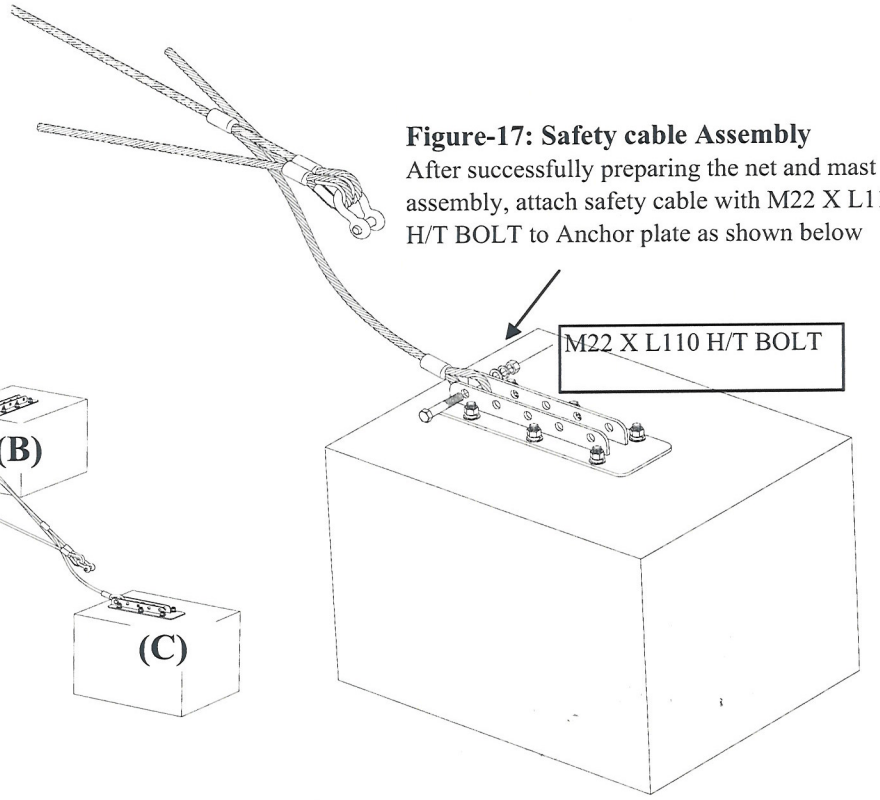

Figure-17: Safety cable Assembly
After successfully preparing the net and mast assembly, attach safety cable with M22 X L110 H/T BOLT to Anchor plate as shown below

[Working Process]

(A) ⇨ (B) ⇨ (C) ⇨ (D) ⇨ (E)

It is strongly recommended that 3-4 workers lift the net into place.

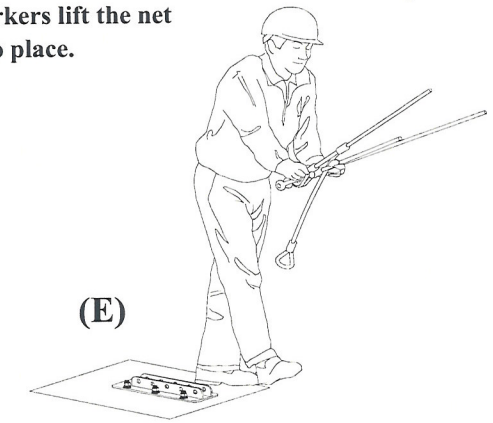

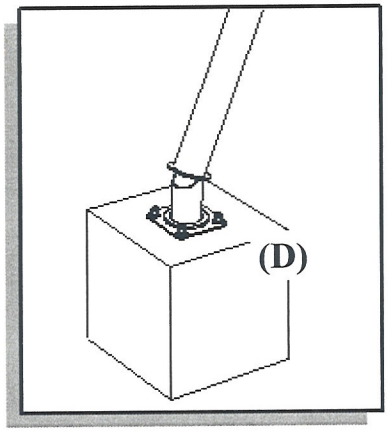

Figure-18: Centre Post

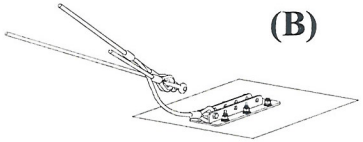

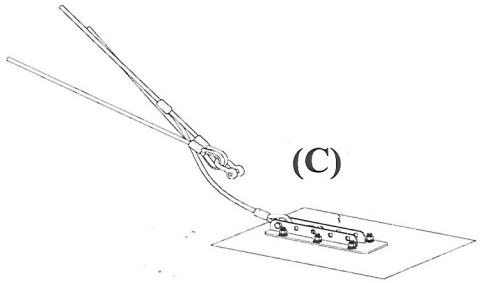

Figure-19: Safety cables attached

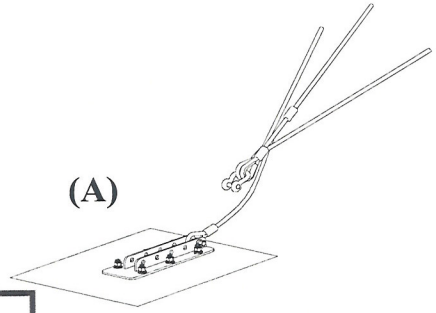

After standing up the Net, Attach remaining safety rope and Turnbuckles

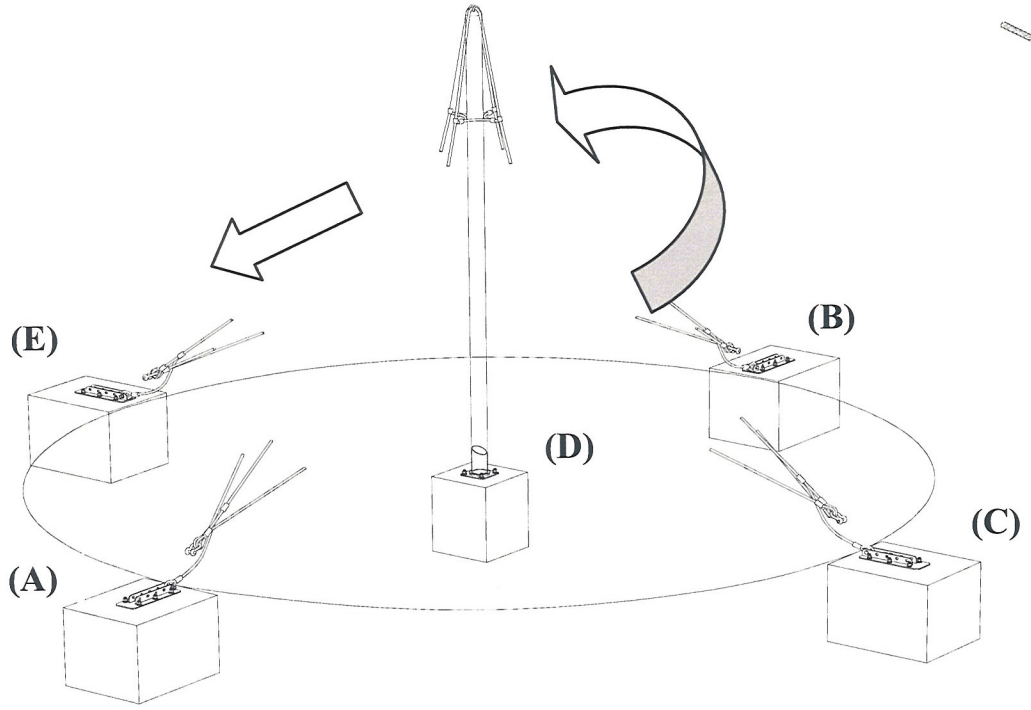

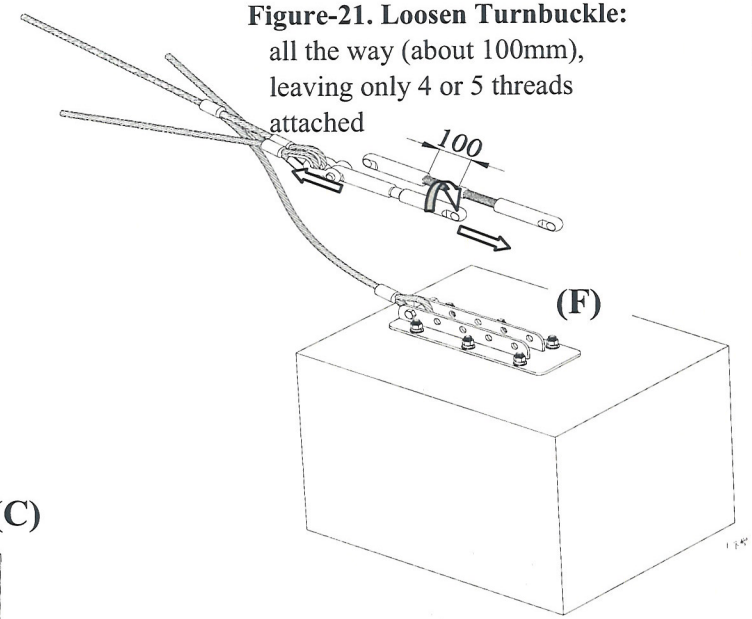

Figure-21. Loosen Turnbuckle: all the way (about 100mm), leaving only 4 or 5 threads attached

(A) ⇨ (B) ⇨ (C) ⇨ (D) ⇨ (E) ⇨ (F)

Anchor plate + Turnbuckle

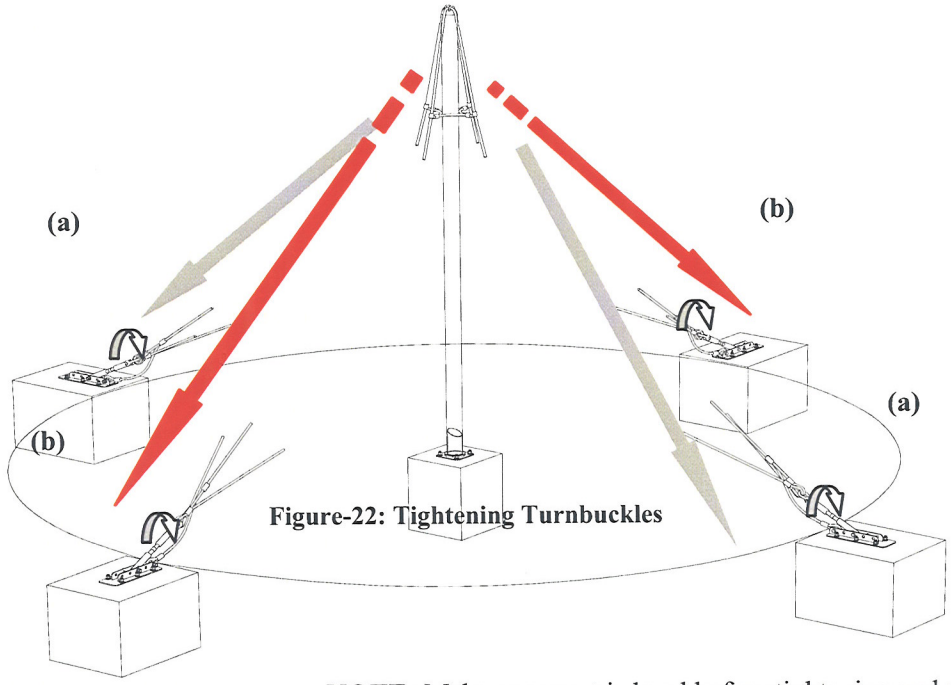

Figure-22: Tightening Turnbuckles

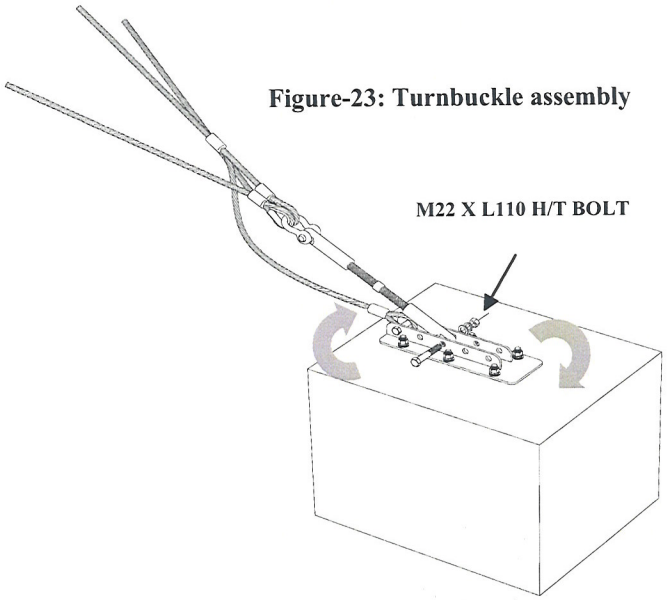

Figure-23: Turnbuckle assembly

NOTE: Make sure post is level before tightening and remains level during process.

(a) + (a) Tighten Rope with Turnbuckles at the Same time

(b) + (b) Tighten Rope with Turnbuckles at the Same time

Maintenance information

Please tighten rope with Turnbuckle properly.
If you strain the net too much, it may cause damage.
It is also recommended that subsequent checks on tension should be carried out at monthly intervals and adjusted as required. This will increase the overall longevity of the product.

Checking: 1 month
Refer to IPEMA and TUV maintance system.

After Net structure tension is completed, the net will stretch slightly over the first four weeks of use.
Following this initial period, the net needs to be fully re-tensioned by Turnbuckle after 1 year.

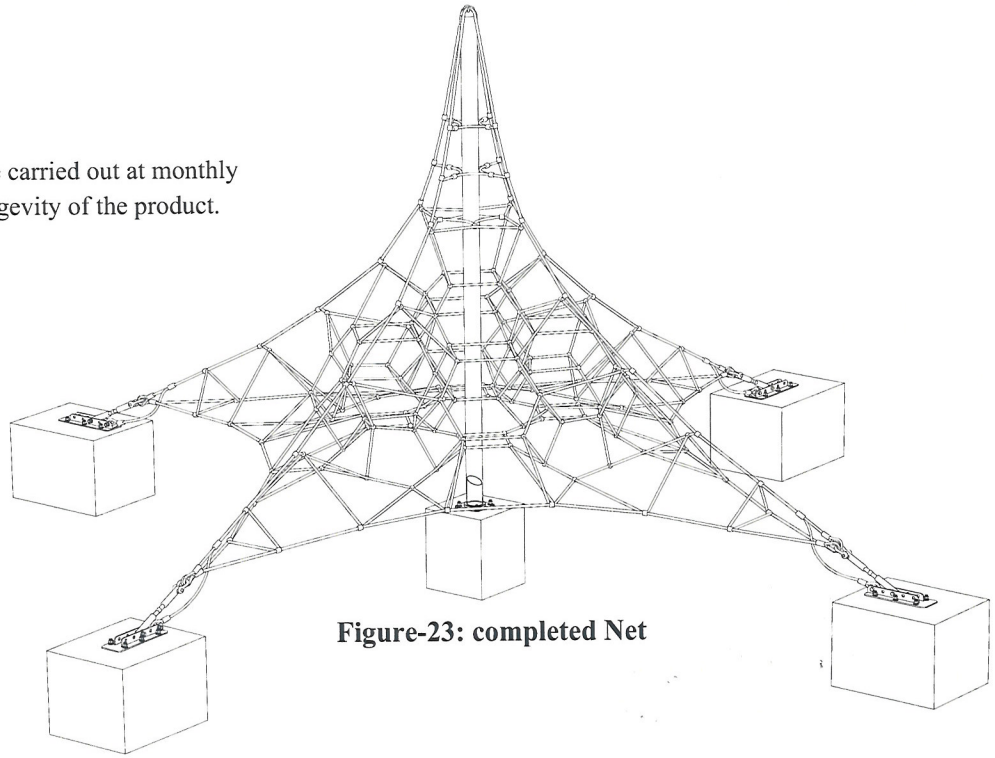

Figure-23: completed Net

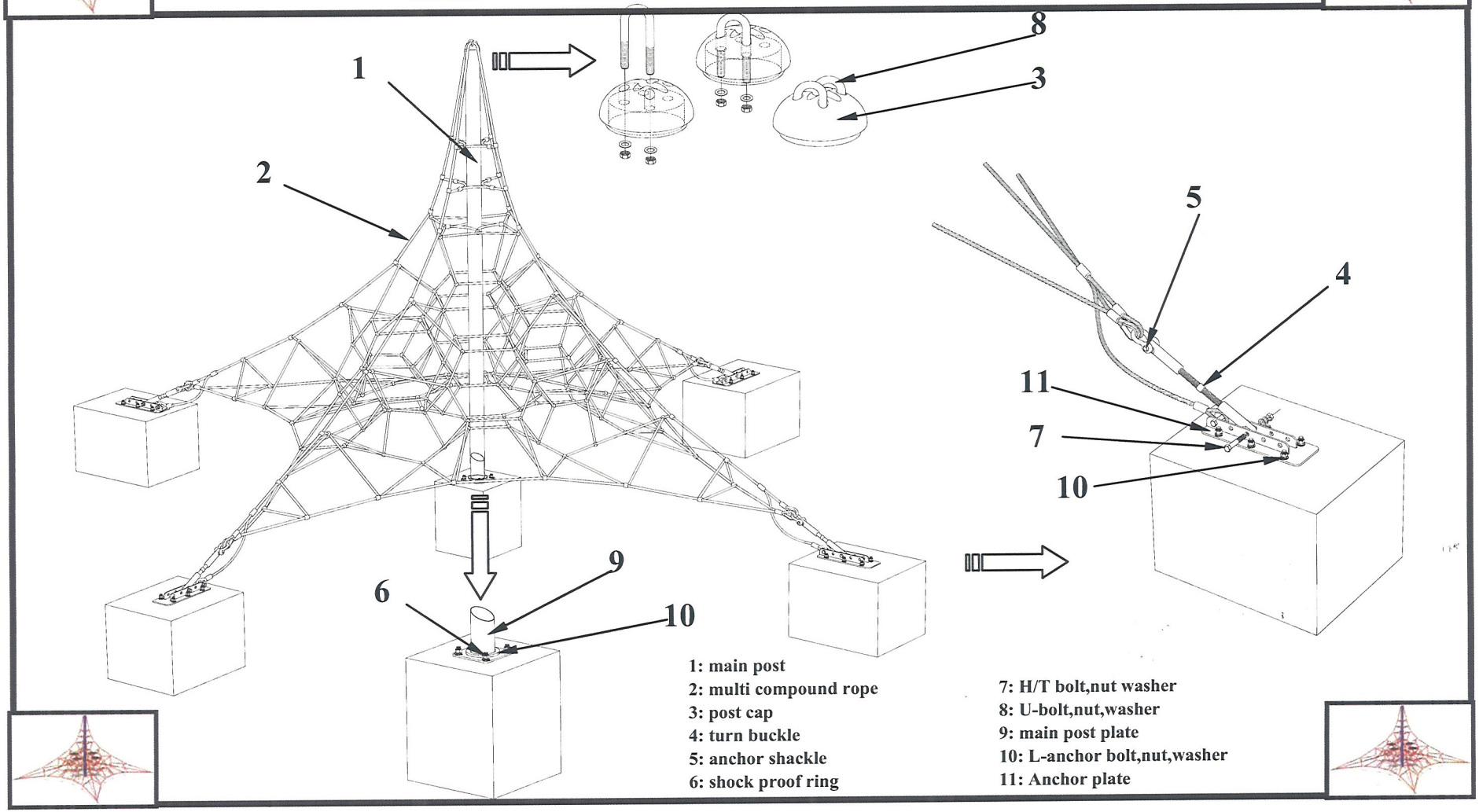

1: main post
2: multi compound rope
3: post cap
4: turn buckle
5: anchor shackle
6: shock proof ring
7: H/T bolt,nut washer
8: U-bolt,nut,washer
9: main post plate
10: L-anchor bolt,nut,washer
11: Anchor plate

A weekly check of the activity net is recommended to ensure that no acts of vandalism have damaged the rope. Periodic checks on tension will assist in the durability of the product.

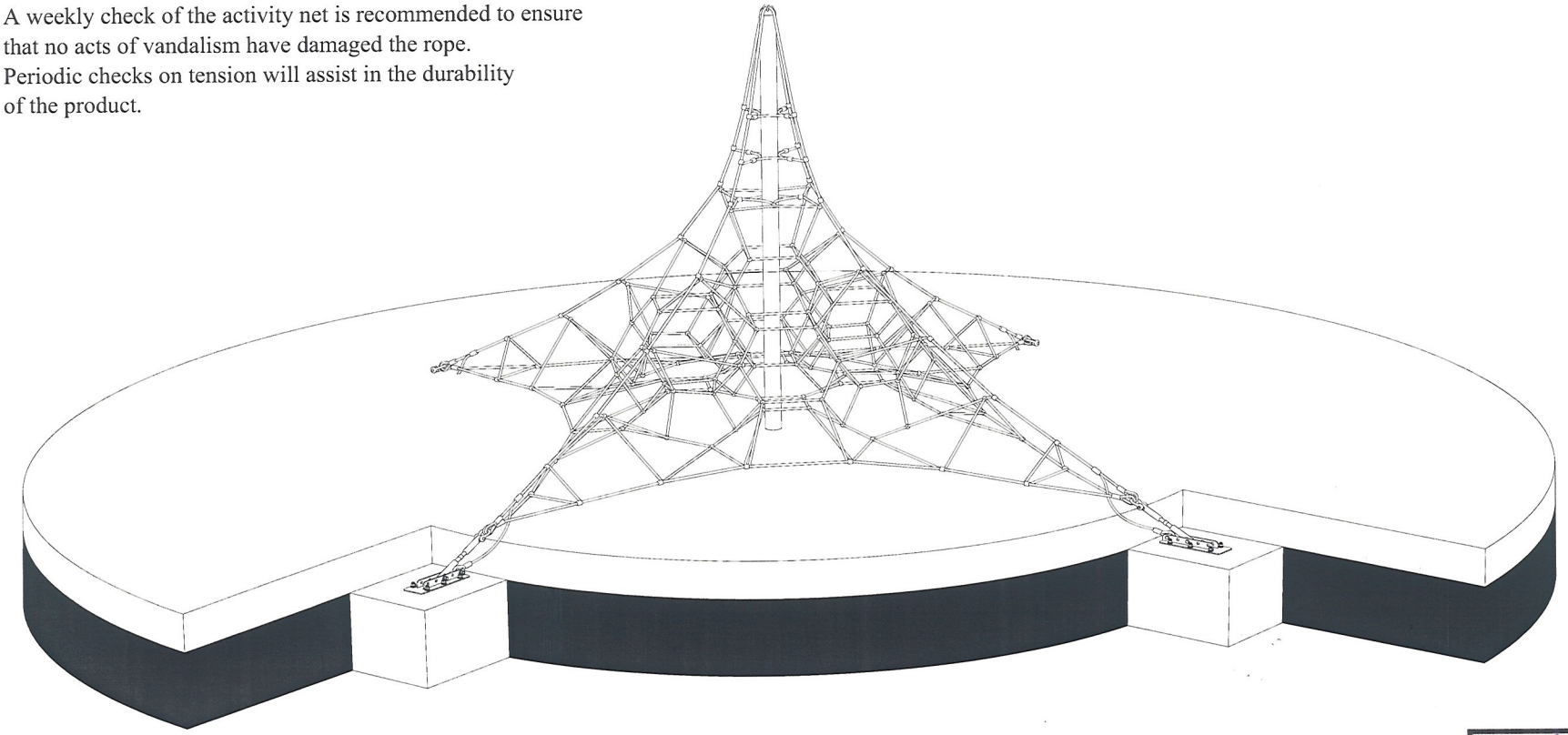

PRIME TIME

A PLAYCORE COMPANY GameTime

Enriching Childhood Through Play.

1-800-235-2440

ISSUED/REVISED: 10/25/16

12583

ADA PRIMETIME SWING

⬡ = INSTALLATION DETAIL

◯ = PARTS LIST REFERENCE

NOTE: 12583 FREESTANDING
12584 ADD-A-BAY

TOPRAIL DIMENSIONS	
DIM. A	2'-10 5/8" [87.95cm]
DIM. B	2'-2" [66.04cm]
DIM. C	1'-10 3/4" [57.78cm]

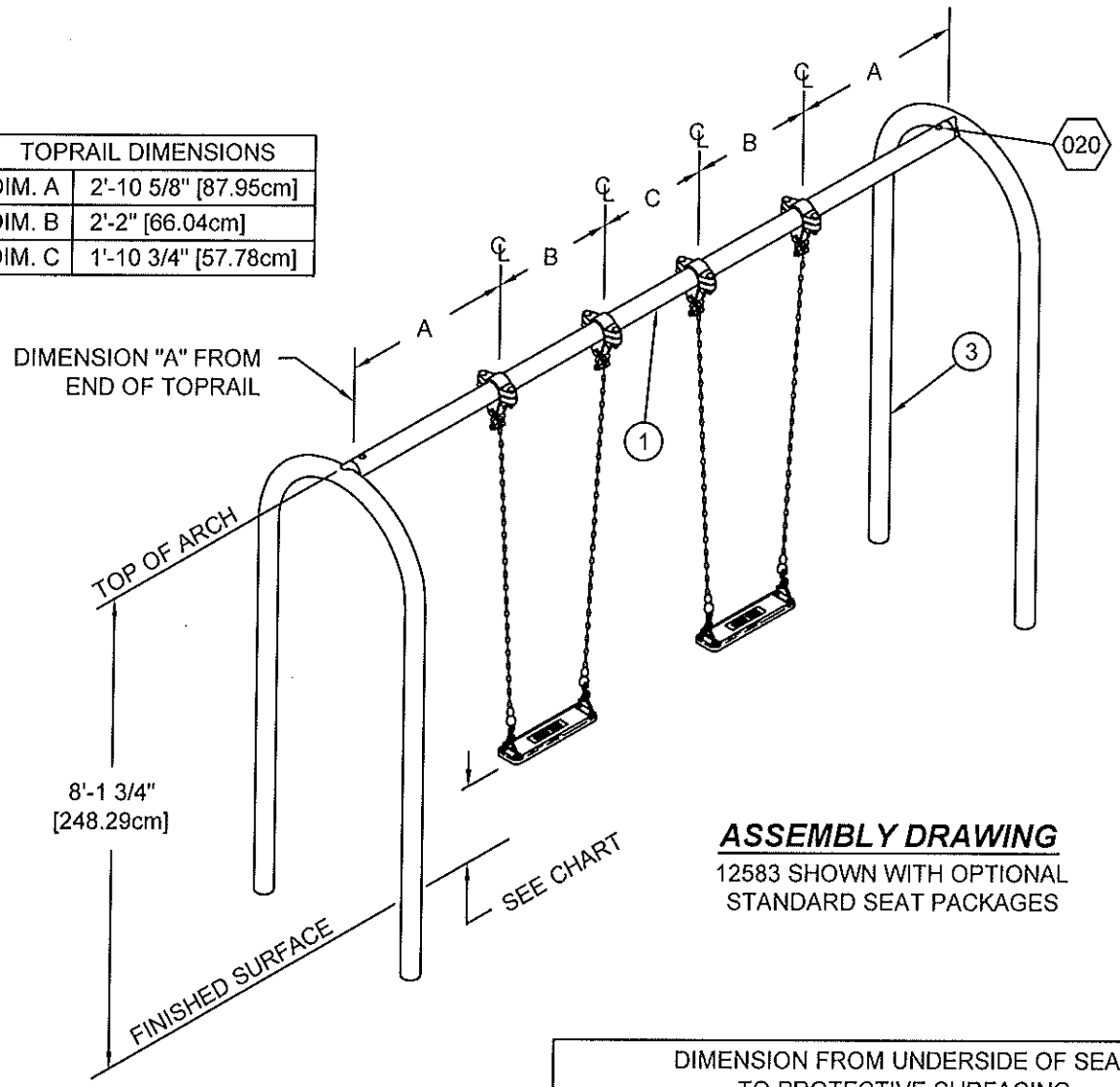

ASSEMBLY DRAWING

12583 SHOWN WITH OPTIONAL STANDARD SEAT PACKAGES

NOTE: SWING SEAT PACKAGES SHOWN ON ASSEMBLY DRAWINGS NOT INCLUDED. SHOWN FOR ILLUSTRATION ONLY.

DIMENSION FROM UNDERSIDE OF SEAT TO PROTECTIVE SURFACING		
STANDARD	MIN.	MAX.
*CANADIAN	1'-2" [35.56cm]	1'-6" [45.72cm]
ASTM	1'-0" [30.48cm]	N/A
DIN	1'-3 3/4"[40.00cm]	N/A
CPSC	N/A	N/A

* UNDER LOADED CONDITION BASED ON WEIGHT OF 165lb. [75kg.]

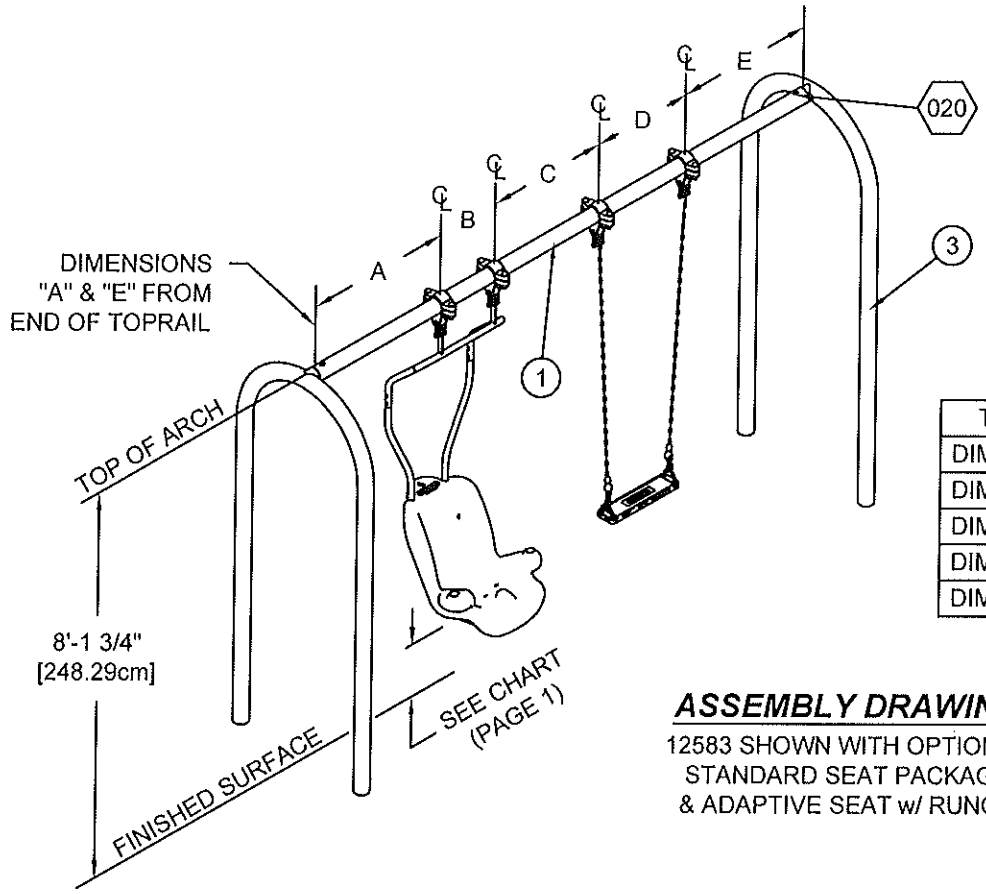

TOPRAIL DIMENSIONS	
DIM. A	3'-1" [93.98cm]
DIM. B	1'-4" [40.64cm]
DIM. C	2'-6 3/8" [77.15cm]
DIM. D	2'-2" [66.04cm]
DIM. E	2'-10 5/8" [87.95cm]

ASSEMBLY DRAWING

12583 SHOWN WITH OPTIONAL
STANDARD SEAT PACKAGE
& ADAPTIVE SEAT w/ RUNGS

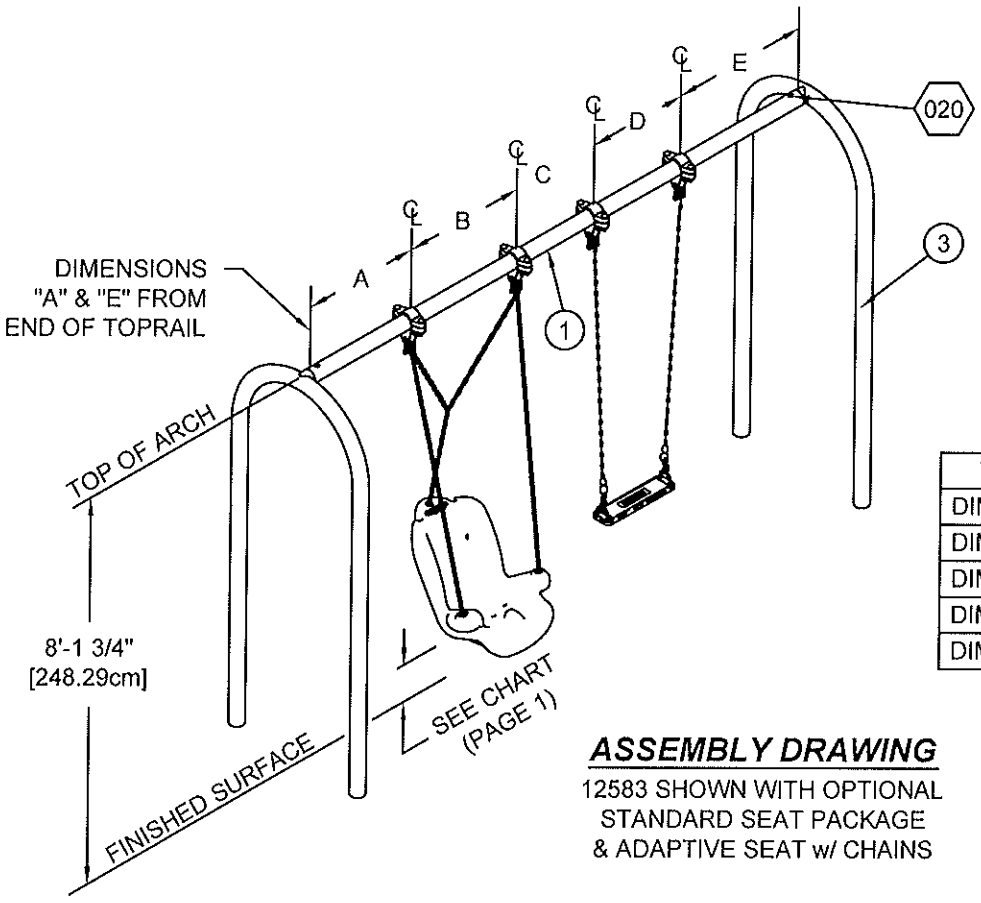

TOPRAIL DIMENSIONS	
DIM. A	2'-5" [73.66cm]
DIM. B	2'-8" [81.28cm]
DIM. C	1'-10 3/8" [56.83cm]
DIM. D	2'-2" [66.04cm]
DIM. E	2'-10 5/8" [87.95cm]

ASSEMBLY DRAWING

12583 SHOWN WITH OPTIONAL
STANDARD SEAT PACKAGE
& ADAPTIVE SEAT w/ CHAINS

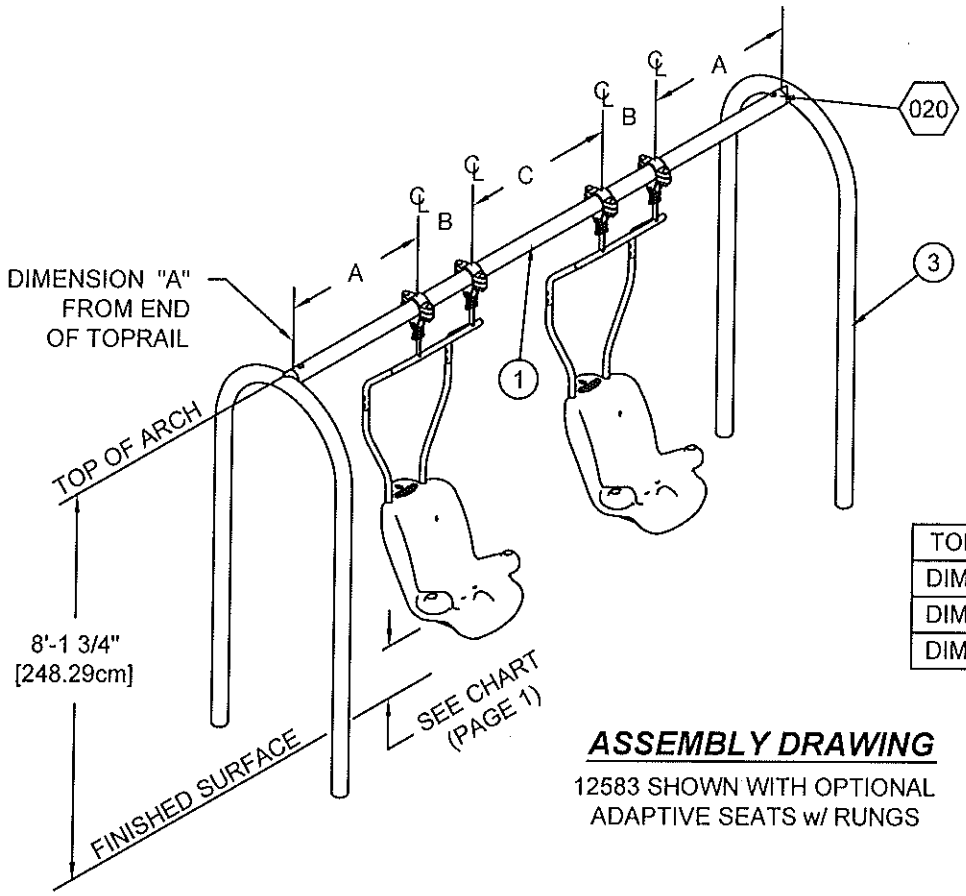

TOPRAIL DIMENSIONS	
DIM. A	3'-1" [93.98cm]
DIM. B	1'-4" [40.64cm]
DIM. C	3'-2" [96.52cm]

ASSEMBLY DRAWING

12583 SHOWN WITH OPTIONAL
ADAPTIVE SEATS w/ RUNGS

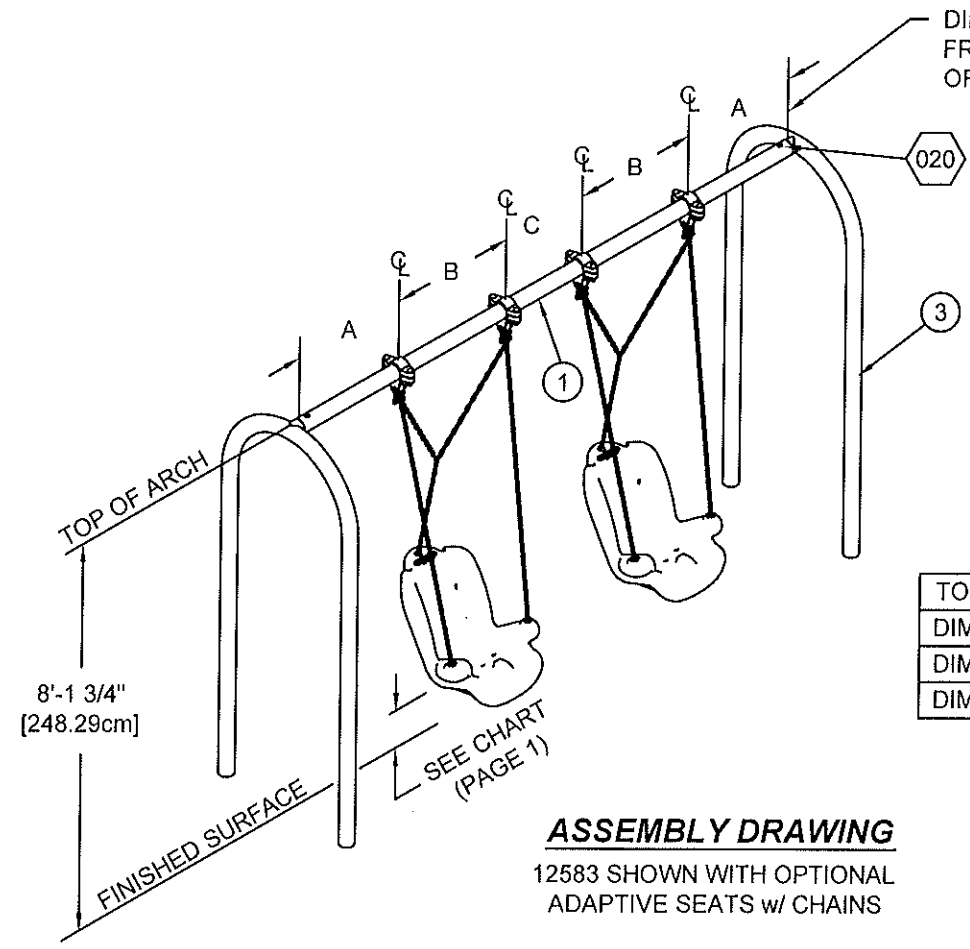

TOPRAIL DIMENSIONS	
DIM. A	2'-5" [73.66cm]
DIM. B	2'-8" [81.28cm]
DIM. C	1'-10" [55.88cm]

ASSEMBLY DRAWING

12583 SHOWN WITH OPTIONAL
ADAPTIVE SEATS w/ CHAINS

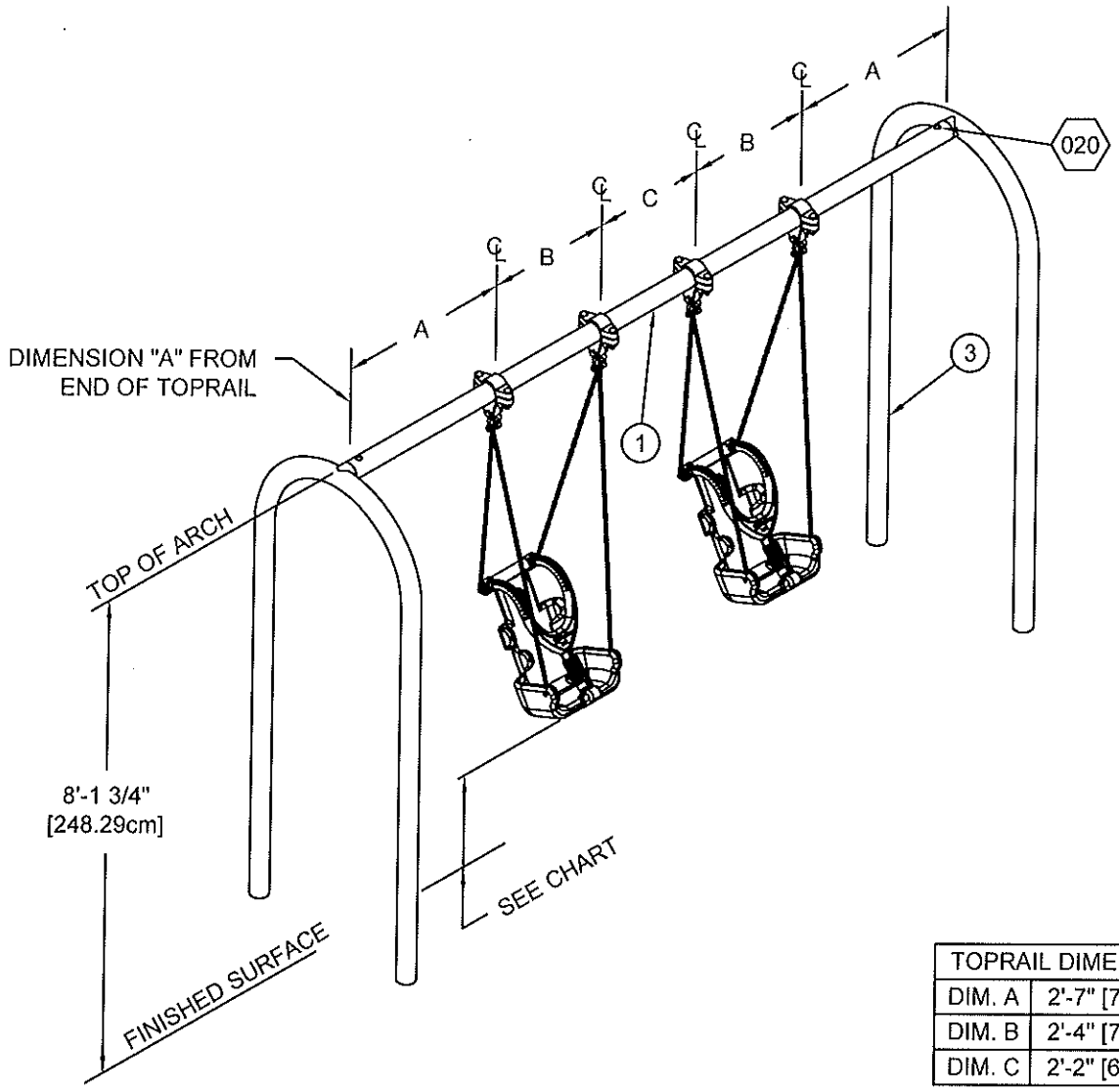

TOPRAIL DIMENSIONS	
DIM. A	2'-7" [78.74cm]
DIM. B	2'-4" [71.12cm]
DIM. C	2'-2" [66.04cm]

ASSEMBLY DRAWING

12583 SHOWN WITH OPTIONAL
ZERO-G CHAIRS

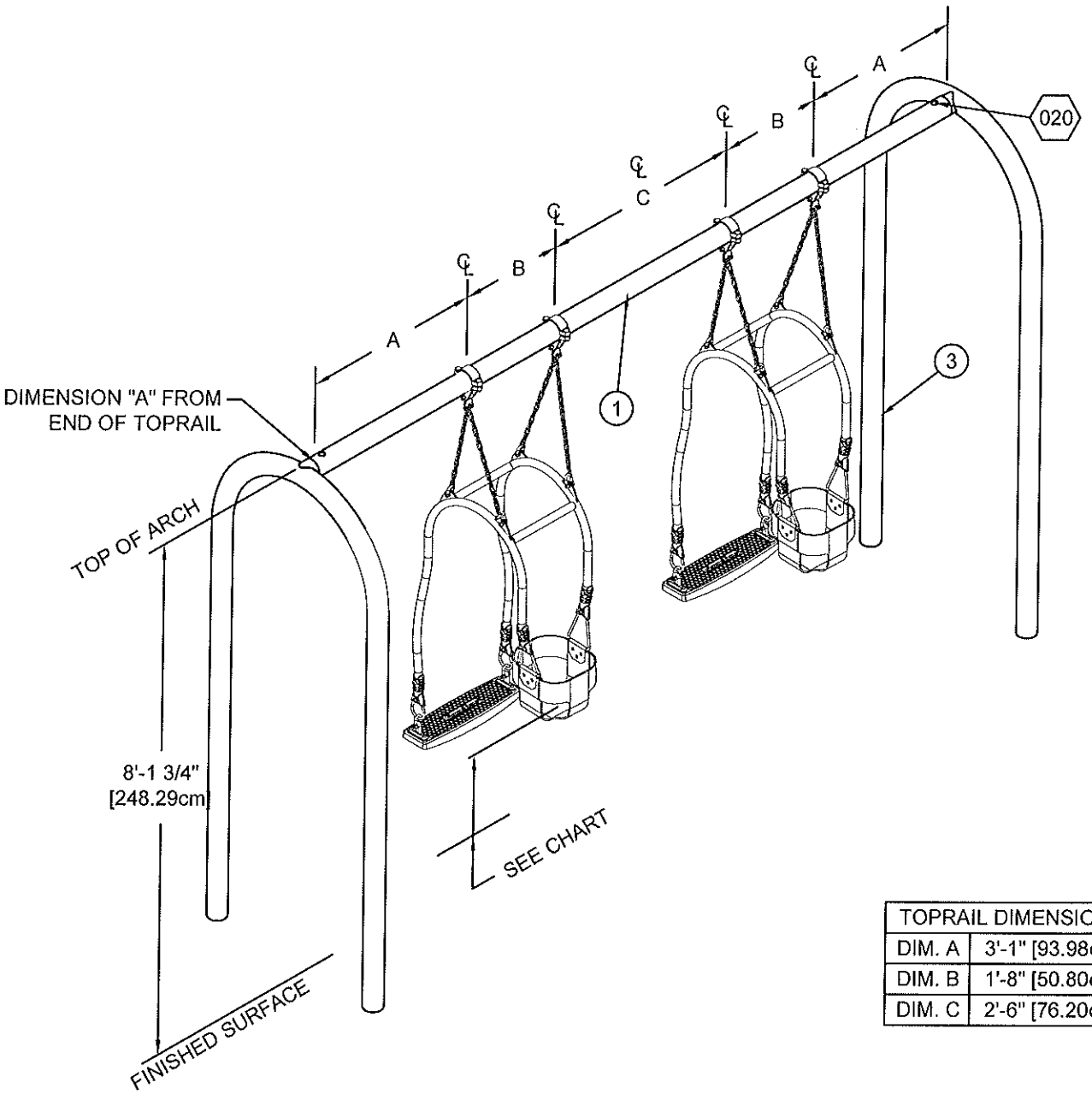

TOPRAIL DIMENSIONS	
DIM. A	3'-1" [93.98cm]
DIM. B	1'-8" [50.80cm]
DIM. C	2'-6" [76.20cm]

ASSEMBLY DRAWING

12583 SHOWN WITH OPTIONAL
EXPRESSION SWINGS

TOPRAIL DIMENSIONS	
DIM. A	3'-1" [93.98cm]
DIM. B	1'-4" [40.64cm]
DIM. C	2'-6" [76.20cm]
DIM. D	2'-8" [81.28cm]
DIM. E	2'-5" [73.66cm]

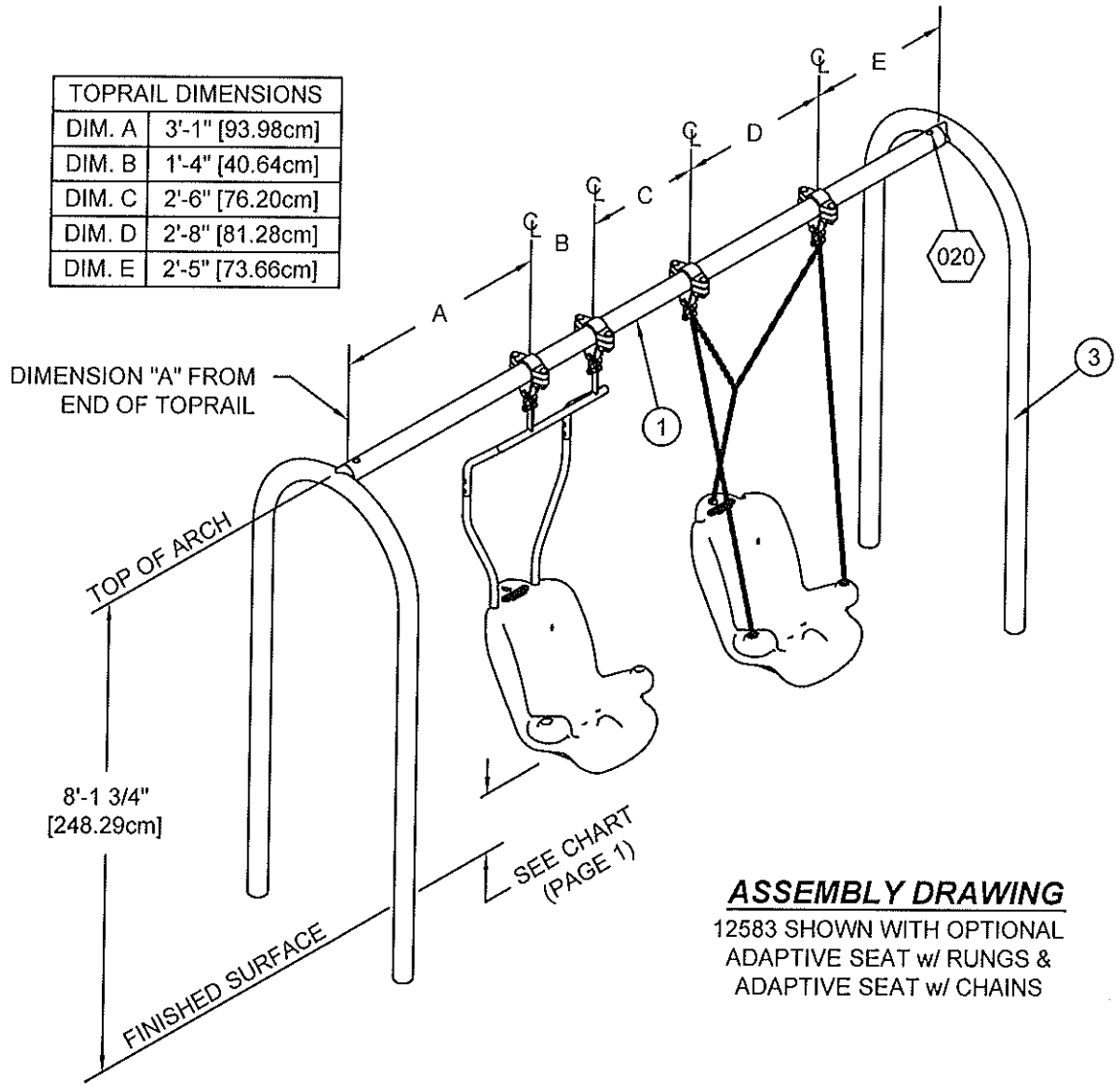

ASSEMBLY DRAWING

12583 SHOWN WITH OPTIONAL ADAPTIVE SEAT w/ RUNGS & ADAPTIVE SEAT w/ CHAINS

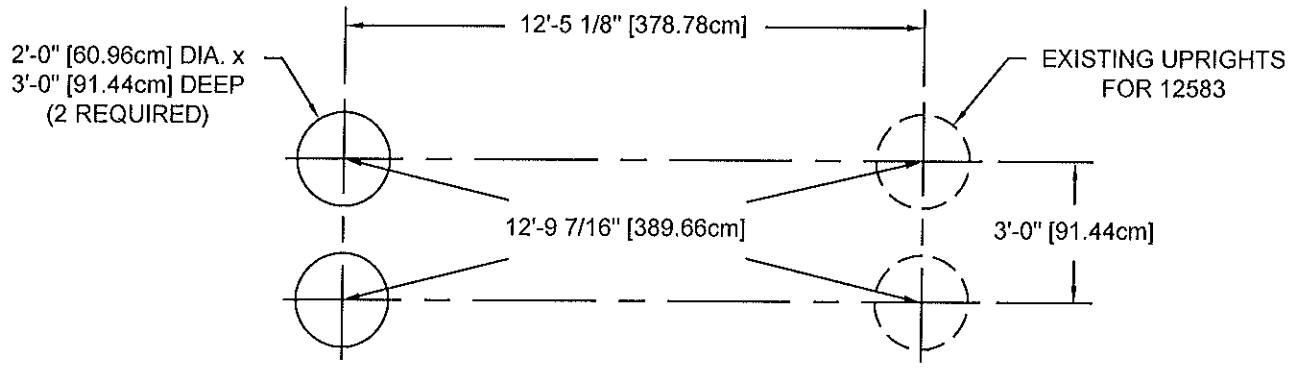

GROUND PLAN

NOTE: Hole depths indicated on all ground plans are measurd from the finished surface. See Detail 005. All footing dimensions are based on level finished surface.

Concrete Required - 12583 :
.92 Cubic Yards
[.70 Cubic Meters]

Concrete Required - 12583/12584 :
1.38 Cubic Yards
[1.06 Cubic Meters]

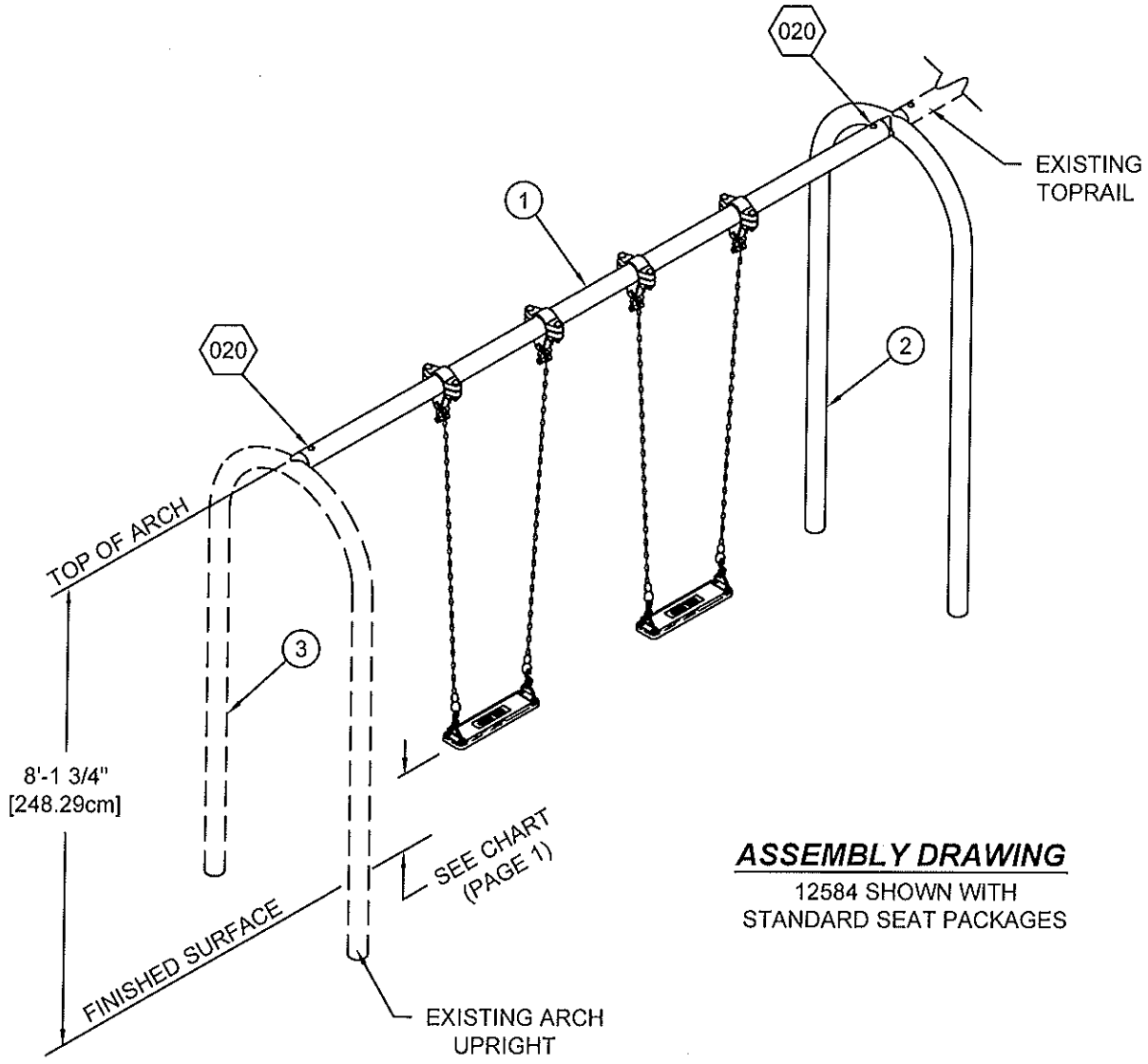

ASSEMBLY DRAWING

12584 SHOWN WITH
STANDARD SEAT PACKAGES

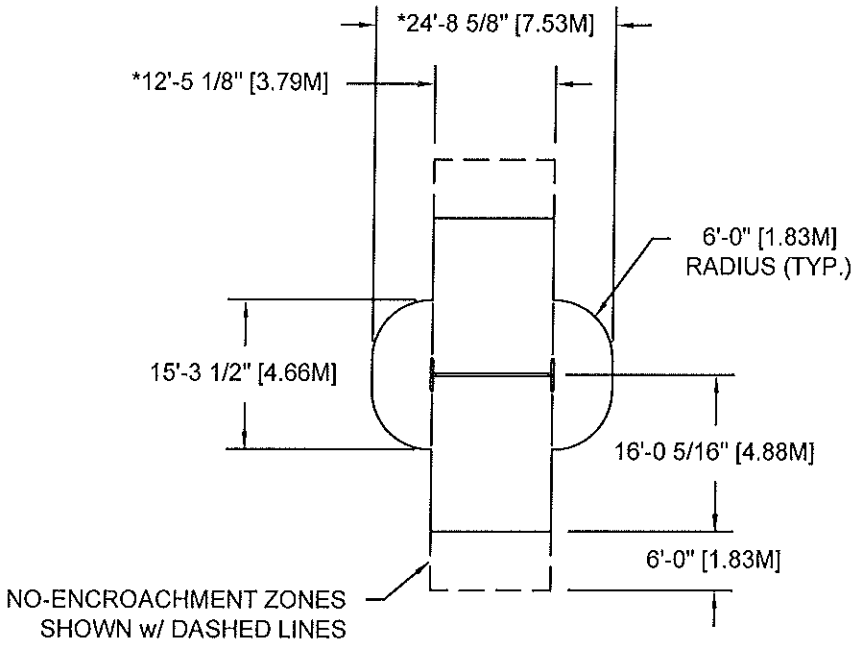

12583

TOP VIEWS

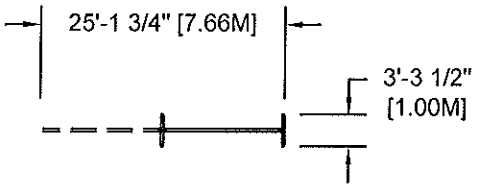

12584

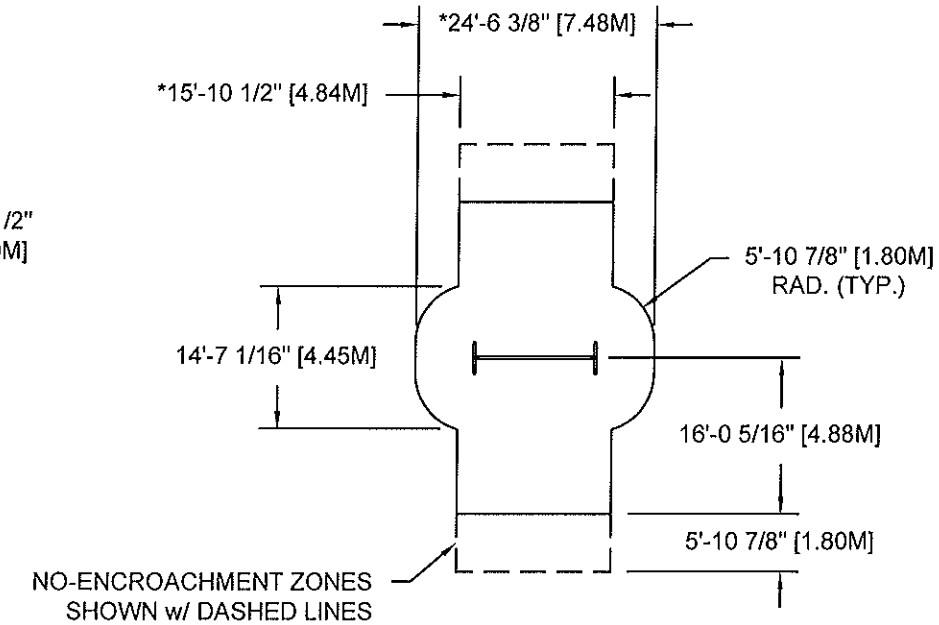

12583 (CSA ONLY)

NOTE:
1. OWNER/OPERATOR SHALL INSTALL AND MAINTAIN PROTECTIVE SURFACING WITHIN THE USE ZONE (U.S.) OR PROTECTIVE SURFACING ZONE (CANADA) OF ALL PLAY EQUIPMENT TO COMPLY WITH ASTM F-1292 AND ASTM F-1487 (U.S.) or CAN/CSA-Z-614 (CANADA).
2. SOLID OUTSIDE BORDER REPRESENTS MINIMUM REQUIRED ASTM USE ZONE AND CSA PROTECTIVE SURFACING ZONE FOR SWING FRAME SHOWN.
3. DASHED LINES REPRESENT CSA *NO ENCROACHMENT* ZONE (CANADA ONLY).
4. *EACH ADDITIONAL CONNECTED SWING FRAME BAY INCREASES THE USE ZONE SURFACING, AND *NO ENCROACHMENT* ZONE DIMENSIONS BY 12'-5 1/8" [3.79M].

SPECIFICATIONS

TOPRAIL AND ARCH: Shall be fabricated of 3-1/2" O.D. (11 Gauge) galvanized steel tubing. Arch includes a welded 3-1/8" O.D. galvanized steel sleeve to which the toprail is fastened.

FINISH: Shall be an electrostatically applied custom formula of TGIC polyester powder with baked finish. Specify color desired.

HARDWARE: All nuts, bolts, screws, inserts, and lockwashers used in the assembly of all play equipment, shall be stainless steel, yellow dichromate plated steel, blue-coat plated steel, mechanically galvanized or powder coated/yellow dichromate plated steel. All primary fasteners shall be 300 series stainless steel. Fasteners with yellow dichromate treatment have an electro-deposited, 99.9% pure zinc substrate applied from a specially formulated solution sealed with a yellow dichromate top coat designed to work in conjunction with the zinc plating. Yellow dichromate has a 320% longer life to white corrosion and 275% longer to red corrosion than does hot-dip galvanizing.

SPECIFICATIONS: GAMETIME® has a policy of continuous improvement and reserves the right to change specifications without notice.

IMPORTANT PRODUCT INFORMATION AND SAFETY WARNINGS

☐ All equipment should be installed on a soft, resilient, energy-absorbing ground surface. NEVER INSTALL PLAY EQUIPMENT ON CONCRETE OR ASPHALT. A fall on a hard surface can result in serious injury to the equipment user.

☐ ALWAYS FOLLOW INSTALLATION INSTRUCTIONS WHEN ERECTING EQUIPMENT.

☐ Worn surfaces around equipment should be restored. Concrete footings should never be exposed. Surface depth should comply with installation instructions.

☐ Equipment should be placed to eliminate conflicting traffic patterns.

☐ To reduce risk of clothing entanglement in compliance with ASTM F1487, any bolt end protruding more than two full threads beyond the face of the nut shall be cut-off, filed smooth and treated to prevent corrosion. Sharp edges on pipes should be capped or removed. Check for bent, broken or severely worn pipe and replace.

☐ Test overall stability and rigidity of all play equipment. Check for proper assembly, installation and ground anchoring.

☐ Check for and repair damage caused by wear or vandalism, a major factor in injury-causing situations.

☐ GAMETIME® PROVIDES ITS CUSTOMERS WITH COMPLETE INSTALLATION SHEETS AND INSTALLATION INSTRUCTIONS. THE INSTALLATION SHEET CONTAINS THE LISTING OF EVERY PART USED IN A PIECE OF EQUIPMENT AND SHOULD BE KEPT IN THE CUSTOMER'S FILES FOR ACCURATE REFERENCE WHEN REPLACEMENT PARTS ARE NEEDED.

☐ Never add components not intended for use with this product.

☐ Regular maintenance is necessary on this and all park and recreational equipment to ensure the safety of the user.

☐ Proper maintenance of GAMETIME® equipment requires regular tightening of all bolts, nuts, and set screws.

☐ All equipment should be free of rust and repainted whenever necessary to deter rusting.

☐ Regular checking of all parts, castings, etc., should be made. If a part is broken or worn it should be replaced immediately.

☐ Replace all worn S-Hooks. S-Hooks must be completely closed. To close S-Hooks properly, use GAMETIME® S-Hook Pliers. Failure to close S-Hooks properly can result in serious injury to the user. Never reuse S-Hooks.

☐ Test for free movement of swing hanger and other moving attached parts.

☐ Check for worn chains and replace them.

☐ Replace worn or damaged seats.

☐ A soft, resilient surface should be placed under all swings, extending at least six feet beyond the farthest arc of the swing seat, both front and back. NEVER INSTALL PLAY EQUIPMENT ON CONCRETE OR ASPHALT.

INSTALLATION INSTRUCTIONS

NOTE: THIS INSTALLATION BOOKLET SHOULD BE KEPT IN CUSTOMER'S FILE FOR FUTURE REFERENCE.

NOTE: Do not overtighten bolts. To overtighten may cause buckling or dimpling of some parts.

NOTE: Read installation instructions thoroughly before starting assembly. Pour concrete only after final assembly is complete. Bracing material may be required during assembly.

NOTE: Do not tighten any nuts, bolts, rods, etc. until the unit is completely assembled.

NOTE: Due to extremes in weather and soil conditions, hole sizes may have to be increased to meet local conditions.

NOTE: It is important to check the hole location in the upright and on the drawings while assembling this unit.

STEP 1: Dig holes according to the Ground Plan (see Detail 005 also). Place a brick or equivalent at the bottom of the hole to provide a solid foundation. Allow for this in hole depth (see Detail 005).

STEP 2: Insert toprail onto socket on the arch and secure with 1/2" x 4" hex head bolt, 1/2" flatwasher, 1/2" lockwasher and 1/2" hex nut. Bolt head should recess inside oversize hole as shown in Detail 020.

STEP 3: Set frame in holes, making sure that legs rest on foundation bricks. Check to ensure swing is level.

STEP 4: Fill holes with concrete per Detail 005. Plumb and brace assembly. Allow a minimum of 48 hours for concrete to harden before continuing.

NOTE: Loctite (supplied by others) should be used on all threaded hardware.

STEP 5: Place swing hangers on toprail using Assembly Drawing for spacing. Hang seats per Installation Sheet for swing seats.

STEP 6: After assembly is complete, place manufacturer's I.D. label in a visible location.

PARTS LIST

REF. NO.	*DESCRIPTION*	*NO. REQ'D*		*PART NUMBER*
		12583	*12584*	
1	3-1/2" O.D. Toprail	1	1	168622
2	Multi-Bay Arch Upright Ass'y	0	1	152805
3	Arch End Upright Ass'y	2	0	152803
	Hardware Complete	1	1	152821
	1/2" x 4" Hex Bolt	2	2	801215*
	1/2" Lockwasher	2	2	817342*
	1/2" Hex Nut	2	2	804055*
	1/2" Flatwasher	2	2	817412*
	Manufacturer I.D. Label	1	1	159151*

Unless Otherwise Specified, All Units of Measure are Each
** Included in Hardware*

Warning: During Installation, Hardware And Small Parts Are Choking Hazards For Young Children. Store Unused Parts Appropriately Until Assembly Is Completed. Once Assembly Is Completed, Remove Any Unused Parts From The Play Environment And Dispose/Save Them In A Secure Location.

Note: Loctite (supplied by others) should be used on all threaded hardware.

DETAILS -for-
12583 & 12584

IMPORTANT

TO REDUCE THE RISK OF CLOTHING ENTANGLEMENT IN COMPLIANCE WITH ASTM F1487, ANY BOLT END PROTRUDING MORE THAN TWO FULL THREADS BEYOND THE FACE OF THE NUT SHALL BE CUT-OFF FLUSH, FILED SMOOTH AND TREATED TO PREVENT CORROSION.

NOTE: AFTER ASSEMBLY IS COMPLETE, PEEN TEE-NUTS AND FLATWASHERS TO MATCH RADIUS OF PIPE.

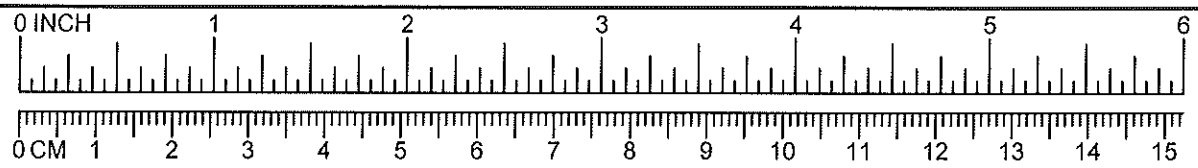

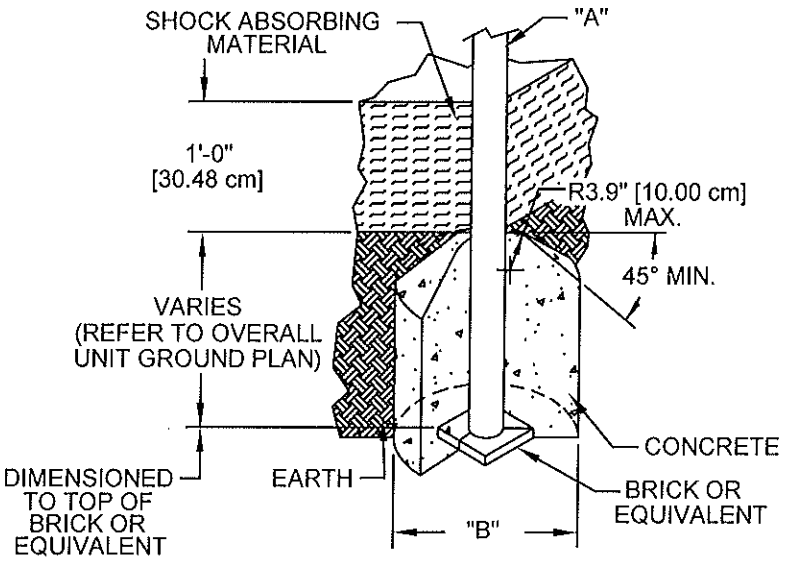

DIA. "A" (PIPE SIZE)	DIA. "B" (FOOTING SIZE)
1 1/16" [2.70 cm]	1'-2" [35.56 cm]
1 5/16" [3.33 cm]	1'-2" [35.56 cm]
1 5/8" [4.13 cm]	1'-2" [35.56 cm]
1 7/8" [4.83 cm]	1'-2" [35.56 cm]
2 3/8" [6.03 cm]	1'-2" [35.56 cm]
3 1/2" [8.89 cm]	1'-6" [45.72 cm]
ARCH SWING	
3 1/2" [8.89 cm]	2'-0" [60.96 cm]

NOTES:
-SLOPED FOOTING IS A REQUIREMENT OF EUROPEAN STANDARD EN1176-1 ONLY
-SUGGESTED MINIMUM CONCRETE RATING: 3000 PSI

005

SHOCK ABSORBING PROPERTIES OF SURFACING MATERIALS VARY. IF YOU DETERMINE THAT LESS THAN 1'-0" [30.48cm] OF SURFACING IS REQUIRED, MAKE UP THE DIFFERENCE IN ELEVATION WITH EARTH, BEFORE APPLYING SURFACING.

NOTE: PEEN FLATWASHERS AFTER INSTALLATION TO MATCH RADIUS OF TOPRAIL.

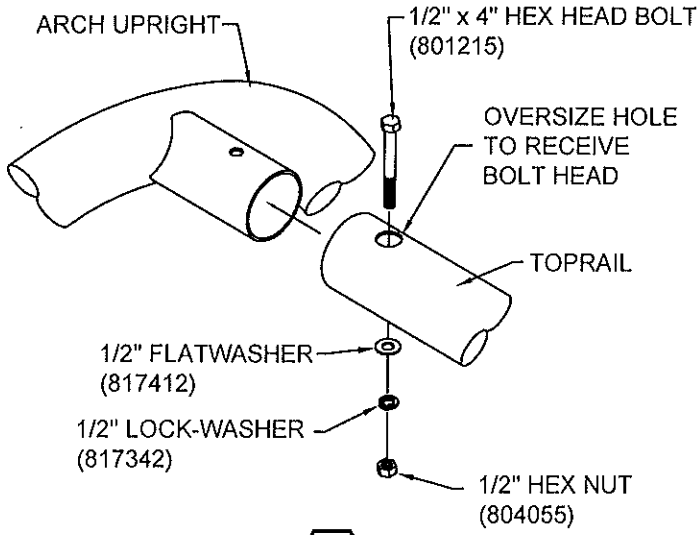

020

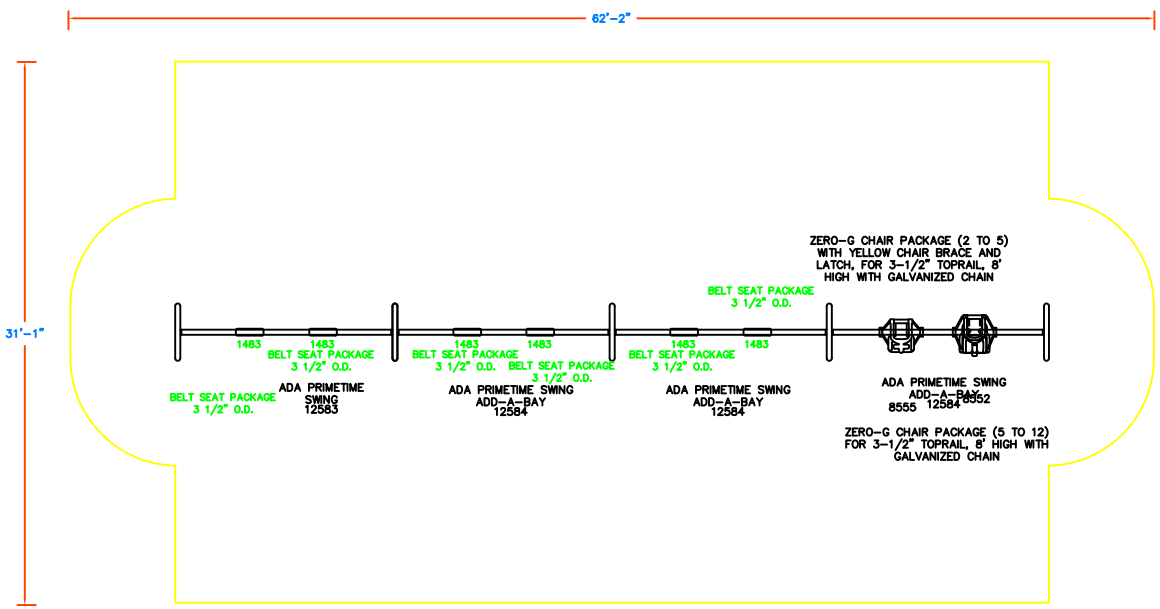

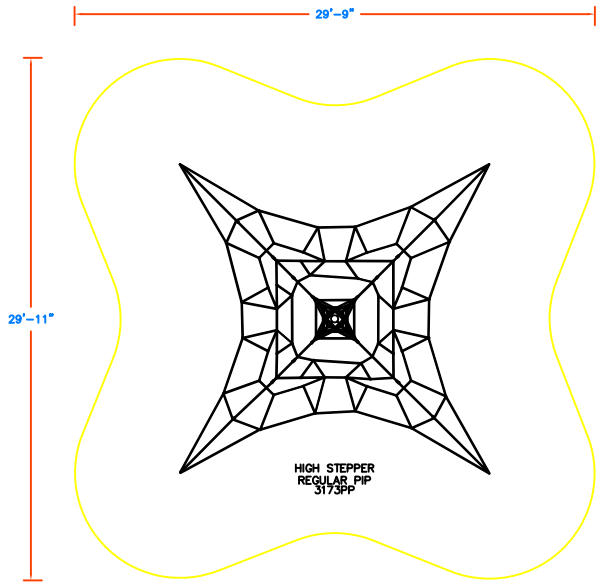

GameTime
A PLAYCORE Company
150 PlayCore Drive SE
Fort Payne, AL 35967
www.gametime.com

ISO 9001 CERTIFIED

ISO 14001 CERTIFIED

Old Greenwich Elementary School

Old Greenwich, CT

Representative
Mike Stankina

This unit includes play events and routes of travel specifically designed to meet the 2010 DOJ ADA (Americans with Disabilities Act) Standards for Accessible Design.

Total Elevated Play Components	0		
Total Elevated Play Components Accessible By Ramp	0	Required	0
Total Elevated Components Accessible By Transfer	0	Required	0
Total Accessible Ground Level Components Shown	0	Required	0
Total Different Types Of Ground Level Components	0	Required	0

This play equipment is recommended for children ages
2-5, 5 - 12

Minimum Area Required:

Scale: 1" = 5'-0"

This drawing can be scaled only when in an 18" x 24" format

IMPORTANT: Soft resilient surfacing should be placed in the use zones of all equipment, as specified for each type of equipment, and at depths to meet the critical fall heights as specified by the U.S. Consumer Product Safety Commission, ASTM standard F 1487 and Canadian Standard CAN/CSA-Z-614

Drawn By: mg

Date: 6.15.17

Drawing Name: Freestanding Equipment