PROJECT MANUAL

DISHWASHER UPGRADE

NEW LEBANON SCHOOL

25 MEAD AVENUE

GREENWICH, CONNECTICUT 06830

BID #2398-22

DECEMBER 2, 2022

ISSUED FOR BID

MEP ENGINEER:

LANDMARK FACILITIES GROUP, INC.

252 EAST AVENUE

NORWALK, CT 06855

TABLE OF CONTENTS

SECTION	PAGES
COVER	1
INVITATION TO BIDDERS	3-4
INSTRUCTION TO BIDDERS	5-9
BID FORM	10-12
CONTRACTOR'S QUALIFICATION STATEMENT	13-18
NON-COLLUSION AFFIDAVIT	19-21
REFERENCES	22
FORM OF BID BOND	23-24
CERTIFICATE AS TO CORPORATE PRINCIPAL	25
PERFORMANCE, MAINTENANCE, AND PAYMENT BOND	26
INSURANCE PROCEDURE	27
INSURANCE REQUIREMENT SHEET	28
SAMPLE ENDORSEMENT LETTER	29
CERTIFICATE OF LIABILITY INSURANCE	30
A.M. BEST KEY RATING GUIDE FORM	31
AFFIRMATIVE ACTION COMPLIANCE AFFIDAVIT	32-33
CONSENT OF SURETY	34
AFFIDAVIT FOR FINAL PAYMENT	35
LIST OF DRAWINGS	36
FORM AU-764 DEPOSIT BY A PERSON DOING BUSINESS WITH A NONRESIDENT CONTRACTOR	37-38
FORM REG-1 BUSINESS TAXES REGISTRATION APPLICATION	39-44
AGREEMENT CONTRACT	45-55

GREENWICH PUBLIC SCHOOLS
Purchasing Department
290 Greenwich Avenue
Greenwich, Connecticut 06830
(203) 625-7411
eugene_watts@greenwich.k12.ct.us

EUGENE H. WATTS
Senior Buyer

December 2, 2022

Dear Sir/Madam:

You are invited to submit a bid for Dishwasher Upgrade at New Lebanon School. The attached bid specifications detail the requirements we are looking for.

Bidders are urged to read all documents carefully and fill out all information requested. Bids which are incomplete, obscure, or conditional, and which contain irregularities of any kind, will be subject to rejection for failure to comply strictly with these conditions.

Bids must be submitted on the schedule forms attached. All unit prices must be filled in and the ***cost sheet must be the first page of the submitted bid***. Each bid must be submitted and clearly marked as (1) original and five (5) copies of the bid. Bidders must submit bids in a clear, concise and legible manner to permit proper evaluation of responsive bid. *The cost sheet must be the first page of the submitted bid.* Faxed or emailed bids will not be accepted however, hand delivered, mailed or overnight bids will be accepted Monday through Friday between the hours of 8:30am -12:00pm and 1:30 pm - 3:00pm at: Greenwich Public Schools 290 Greenwich Avenue Greenwich, CT 06831. ***Late bids will not be accepted.***

The original bid and copies must be in a sealed envelope plainly marked with the Vendors name and address and the following information:

Dishwasher Upgrade at New Lebanon School
Opening Date: December 21, 2022
Opening Time: 10:00 a.m.
Bid Number: 2398-22

Mandatory Walk-through
New Lebanon School
25 Mead Avenue
Greenwich, CT 06830
12/07/22 @ 9:30 a.m.

The meeting for the Bid opening will be held remotely by telephone in real time. The details to join the meeting remotely are as follows:

Dial-In by phone: +1 413-438-7424 PIN: 141 335 946#

All Bidders and other interested people are invited to call in to hear Bid 2398-22 being read at 10:00 a.m.

Very truly yours,

Eugene H. Watts

INSTRUCTIONS TO BIDDERS

1.1 The Greenwich Public Schools, Greenwich, CT, invites bid proposals for the following:

A. **NEW LEBANON SCHOOL DISHWASHER UPGRADE** for the Greenwich Public Schools.

1.2 BACKGROUND:

A. TOWN / DISTRICT: The Town of Greenwich is approximately 30 miles northeast of New York City and has a population of about 60,000 residents. The Greenwich Public Schools enjoy a national reputation for excellence and have strong support from the community. The fifteen public schools have an enrollment of 9,000 students and consists of eleven elementary schools (K-5), three middle schools (6-8), and one comprehensive high school (9-12).

B. MEP ENGINEER: Landmark Facilities Group, Inc. 252 East Avenue, Norwalk CT 06855

1.3 SCHEDULE:

A. Mandatory Pre-Bid Walk Through:

1. Wednesday, **December 7**, 2022 at 9:30am, New Lebanon School (Main Entrance).

B. Bid Due Date:

1. Sealed proposals will be received as indicated below, and at that time and place will be publicly opened and read aloud.
2. Date: **December 21, 2022**
3. Time: **10:00am local time**
4. Location: **District Offices**
5. Address: GREENWICH PUBLIC SCHOOLS, 290 Greenwich Ave., Greenwich, Connecticut 06830, (203) 625-7411
6. All bidders and other interested persons are invited to be present at this bid opening(s).

C. QUESTIONS:

1. Questions concerning this bid will be received by email only and directed to:
   a. **bid_department@greenwich.k12.ct.us**.
   b. In the subject line you must put BID #2398-22, New Lebanon School Dishwasher Upgrade.
   c. All questions must be submitted no later than 12:00pm, **December 13**, 2022.
2. All answers will be provided by written BID ADDENDUM at **www.greenwichschools.org** at noon on **December 15,** 2022. It is the responsibility of all bidders to verify that they are current with all posted information.
3. Failure to comply with these conditions will result in the bidder waiving his right to dispute the bid specifications and conditions.

1.4 BID SUBMISSION / REQUIREMENTS:1

A. Bidders are required to order their bid such that the bid form appears on page 1 of the bid package.

B. Each bid shall be signed and accompanied by a bid security payable to the Town of Greenwich in the amount of ten (10%) of the bid and shall be in the form of a Bid Bond only as issued in the bid documents. Bid Bonds must use the Greenwich Public Schools Bid Bond Form (included within the bid documents), issued by a surety company listed on the current U.S. Dept of Treasury's Federal Register and be licensed to underwrite bonds in the State of Connecticut.

C. Each bid shall be accompanied by a completed copy of the CONTRACTOR'S

QUALIFICATION STATEMENT included in the bid documents. The Greenwich Public Schools reserves the right to request further information and/or supplemental information with respect to the QUALIFICATION STATEMENT of its sole discretion.

D. Each bidder shall utilize the specified manufacturers. Should the contractor desire to substitute other articles, materials, apparatus, products, or processes, other than those specified or approved as equal, the contractor shall apply to the engineer, in writing, for approval of such substitution. It should be noted that the bid shall not be based on a substituted article, material, apparatus, product, or process. No substitution review shall take place prior to bid.

E. Each form of the bid contains a section for alternates and for unit prices. All alternate prices must be completed with a dollar value. Blanks, “Not Applicable” (N/A), “No Effect”, etc in these portions of the BID FORM shall be construed to indicate that the particular alternate shall be performed without increase to the contract price as they relate to the scope of the trade package.

F. Unit prices which do not affect the work of the bidder’s trade may be filled in “Not Applicable” or “(N/A)”. “Not Applicable” or Blanks in these Bid Forms and shall be construed to indicate that the unit price is not applicable as it relates to the scope of the trade package.

G. TAX: No amount shall be added for the Connecticut sales tax or Federal tax. The Greenwich Public School system is exempt from the payment of taxes imposed by the Federal government and/or State of Connecticut. Taxes must not be included in the bid price.

H. PERMIT FEES: Greenwich Public Schools will secure the building permit(s) and upon award of the Contract they will be transferred to the awarded contractor / vendor. No cost should be included in the base bid for the building permit.

I. WAGES: All work shall be done in accordance with applicable State statutes; conditions of Prevailing Wages shall apply. Prevailing Wage Schedule provided herein is for demonstrable purposes only. It is the responsibility of the bidder / vendor to verify actual rates.

J. BACKGROUND CHECK: Per Connecticut General Statutes CGS § 10-221d, which went into effect July 1, 2016, and 10-222c, all people who are entering into a paid agreement with a school district must submit to a mandatory background check.

K. COLLUSION AMONG BIDDERS:

1. More than one offer from an individual, firm, partnership, corporation, or association under the same or different name will be rejected. Reasonable grounds for believing that a bidder is interested in more than one bid for the work contemplated will cause rejection of all bids in which the bidder is interested. Any or all bidders will be rejected if there is any reason for believing that collusion exists among the bidders.
2. Participants in such collusion may not be considered in future offers for the same work. Each bidder, by submitting a bid, certifies that it is not party to any collusive action.
3. Each bid shall be accompanied by a completely filled in and properly executed **Non-Collusive Affidavit**, provided on [page 19].

L. EMPLOYMENT DISCRIMINATION BY CONTRACTOR PROHIBITED:

1. The successful bidder will not discriminate against any employee or applicant for employment because of

race, religion, color, sex, or national origin, expect where religion, sex, or national origin is a bona-fide occupational qualification reasonably necessary to the normal operation of the contractor.

2. The successful bidder agrees to post in a conspicuous place, available to employees and applicants for employment, notices setting forth the provision of this nondiscrimination clause.
3. The successful bidder in all solicitations or advertisements for employment, placed by or on behalf of the contractor, will state that such successful bidder is an EQUAL OPPORTUNITY EMPLOYER.

M. QUALIFICATIONS: No qualifications to the bid are allowed. If bids are qualified, they may be deemed non-responsive and subsequently rejected.

N. No Bidder may withdraw their Bid within 90 days after the actual date of Bid Opening

O. COPIES: Failure to submit a bid with four copies does not constitute a material defect.

P. BID EVALUATION: A committee composed of various administrators will evaluate bids. The following criteria guidelines will be used in analyzing and evaluating this bid:

1. Conformance to the requirements of this bid, i.e. conformance to Terms, Conditions, and Scope of Work.
2. Proven skills and technical competence.
3. Background of the firm.
4. For Vendor firm, identification of all personnel who will have a principal responsibility.
5. The Board of Education may consider proximity of the vendor's service as a factor in determining lowest responsible bid. Companies must be located within 100 miles of the School District in order to submit a bid.
6. The Board of Education shall have the right to take such steps as it deems necessary to determine the ability of the bidder to perform the work and the bidder shall furnish the Board of Education with information and data for this purpose as the Board of Education may request. The right is reserved to reject any bid where, on investigation, the evidence or information submitted by such bidders does not satisfy the Board of Education that the bidder is qualified to carry out properly the terms of the Contract.
7. Apparent low bidder agrees to submit the following Supplements to Greenwich Pubic Schools within 48 hours after submission of the Bid for consideration in award of the Contract:
   a. Subcontractors; Include the names of all Subcontractors and the portions of the Work they will perform.
   b. Cost Breakdown identifying the Bid Price/Sum segmented into portions as requested, broken down per school building. (Schedule of Values)

Q. AWARD: The Contract shall be awarded to the lowest responsible and qualified bidder, meaning the bidder whose bid is the lowest of those bidders possessing the skill, ability, and integrity necessary to faithfully perform the work based on objective criteria considering past performance and financial responsibility. In considering past performance, the Greenwich Public Schools shall evaluate the skill, ability, and integrity of bidders in terms of the bidders' fulfillment of contract obligations and all the bidders' experience or lack of experience with projects of similar size and scope. The Greenwich Public Schools reserves the right to consider as unqualified to do the work required by the bid documents any bidder that does not habitually perform with its own forces the major portion of the work involved in the bid

documents. No contract will be awarded to any bidder who is at time of award not qualified under applicable regulations issued by the Secretary of Labor, United States of Department of Labor, or any applicable State and local laws and regulations.

R. REJECTION: after review of all sectors, terms, and conditions, including price, Greenwich Public Schools reserves the right to reject any and all bids, or any part thereof, or waive defects in same.

S. Any bid may be withdrawn prior to the opening time and date. Any bids received after the specified time and date will not be considered.

1.5 BIDDER QUALIFICATIONS:

A. The Department of Administrative Services (DAS) Construction Contractor Prequalification Program (C.G.S. 4a-100) requires all contractors to prequalify before they can bid on a contract or perform work pursuant to a contract for the construction, reconstruction, alteration, remodeling, repair or demolition of any public building or any other public work by the state or a municipality, estimated to cost more than $500,000 and which is funded in whole or in part with state funds, except a public highway or bridge project or any other construction project administered by the Department of Transportation.

B. Companies must be located within 100 miles of the School District in order to submit a bid.

C. Companies submitting a bid must be in business under the same corporate name for a minimum of five (5) years.

D. Non-Connecticut Contractors: Pursuant to Connecticut General Statutes §12-430(7), as amended by Public Act No. 11-61, Section 66, a non-resident contractor shall comply with the State of Connecticut's bonding requirements.

1.6 CONTRACT:

A. SINGLE PRIME CONTRACT will be let for:

1. General Construction
2. Bid awards must be approved by the Greenwich Public Schools. All contractors shall be required to execute the Greenwich Public Schools standard form of Contract and accompanying Payment & Performance Bonds without exception.

B. LENGTH: This bid is for awarding the contract to cover the period beginning **December 20**, 2022. Once this Bid is awarded, successful bidder must make arrangements to meet with Greenwich Public Schools as required.

C. OPTION TO EXTEND: All work associated with the project shall be completed on or before **February 28**, 2023. The Board of Education may, at their option and with the approval of the vendor, extend the period of the Contract to **March 31**, 2023. If the Board of Education intends to extend the contract period, the vendor shall be notified in writing by the purchasing department at least fourteen (14) calendar days prior to the expiration of the original contract.

D. AWARD OF CONTRACT: The contract will be awarded by the Board of Education to a qualified firm or person at compensation determined to be fair and reasonable considering budgetary limitations, scope, complexity, and the nature of goods and/or services.

1. If there is a conflict between the Contract Agreement and the General Conditions, the Contract Agreement shall prevail.
2. The successful bidder will produce for the Greenwich Public Schools review a current

financial statement, which will remain strictly confidential.

E. The contractor shall simultaneously with the signing of the Contract, furnish the Town the executed Performance, Maintenance, and Payment Bond of a surety company authorized to do business in the State of Connecticut, and acceptable to the Town, in the sum of all the full amount of the Contract Obligation in the form provided by the town. The Performance Bond will not be required where the total estimated cost of labor and materials under the contract with respect to which such general bid is submitted is less than one hundred thousand dollars ($100,000). Once a contract exceeds $100,000 the bidder will be responsible for obtaining and paying for all bonds required by Greenwich Public Schools.

F. FEE PAYMENTS: The Greenwich Public Schools reserves the right to provide payment in accordance with completion of services based on the Project Schedule.

G. BACKGROUND CHECK: The bidder is required to do Employee Background Checks as imposed by Section 2 of Public Act 16-67, which amended Conn. Gen. Stat. 10-222c.

PART 2 - PRODUCTS (Not Applicable)

PART 3 - EXECUTION

3.1 PROVISIONS:

A. Consumption or use of alcohol and / or drugs is prohibited on school property. Any individual with alcohol or drugs will be removed from said property and will not be allowed to work on the project. Smoking is prohibited in all school buildings and on school grounds.

B. Greenwich Public Schools reserves the right to reject any proposed subcontractor for reasonable cause.

BID FORM

The undersigned hereby proposes to furnish all labor, materials, devices, appliances, supplies, equipment, services, and other facilities necessary to complete all of the work of the above referenced Contract, as required by, and in accordance with, the provisions of the Instructions to Bidders, the Conditions of the Contract, the Drawings and Specifications, all as prepared by Landmark Facilities Group, Inc. dated December 2, 2022; and that, if this Proposal is accepted, the Undersigned agrees to enter into an Agreement with the Owner to perform this work for the sum(s) as follows:

SUBMITTED BY: _____

Bidder's Full Name (please print) _____

Bidder's Primary Email Address _____

Address _____

_____

City, State, Zip

1.1 **BASE BID VALUE:**

A. **BASE BID:** The Base Bid Proposal for all work required by the Contract Document for the Dishwasher Upgrade Project at **New Lebanon School** and Related Work is as follows:

_____ ($) DOLLARS

1.2 **ALTERNATE VALUES:**

A. The values of Alternates to the Base Bid amount are identified below.

1. Alternate #1_____.
2. Alternate #2_____.
3. Alternate #3_____.
4. Alternate #4_____.
5. Alternate #5_____.
6. Alternate #6_____.

1.3 **ACCEPTANCE**:

A. If this bid is accepted by Greenwich Public Schools within the time period stated above, we will:

1. Execute the Agreement within seven days of receipt of Notice of Award.
2. Furnish the required bonds within seven days of receipt of Notice of Award.

B. If this bid is accepted within the time stated, and we fail to commence the Work or we fail to provide the required Bond(s), the security deposit shall be forfeited as damages to Greenwich Public Schools by reason of our failure, limited in amount to the lesser of the face value of the security deposit or the difference between this bid and the bid upon which a Contract is signed.

1.4 **CONTRACT TIME:**

A. The Undersigned agrees in the Base Bid to complete the work as per the Milestone Schedule provided in the Specifications.

1.5 **ADDENDA**:

A. The following Addenda have been received. The modifications to the Bid Document noted below have been considered and all cost are included in the Bid Sum.

1. Addendum#_____ Date_____.
2. Addendum#_____ Date_____.
3. Addendum#_____ Date_____.
4. Addendum#_____ Date_____.
5. Addendum#_____ Date_____.

1.6 **BIDDER'S FURTHER AFFIRMATION AND DECLARATION**

A. The above name bidder and should this bid be a joint bid each party thereto, further affirm and declares;

1. That said bidder is of lawful age and the only one interested in this bid; and that no other person, firm, or corporation, except those hereinabove names has any interest in this bid or in the contract proposed to be entered into.
2. That said bidder is not in arrears to the Greenwich Public School upon debt or contract, and is not a defaulter, as surety or otherwise upon any obligation to the Greenwich Public Schools.
3. That no member of the Greenwich Public Schools or any officer or employee of the Greenwich Public Schools or person whose salary is payable in whole or in part from the School District treasury, or the spouse of any foregoing is or shall be or become interested, directly or indirectly, as a contracting party, partner, stockholder, surety, or otherwise, in this bid, or in the performance of the Contract, or in the supplies, materials, or equipment and work or labor to which it relates, or in any portion of the profits thereof.
4. That he/she has carefully examined the site of the work and that, from his/her own investigations, he/she has satisfied him/herself as to the nature and location of the work, and character, quality and quantity of material, and all difficulties likely to be encountered, the kind and extent of equipment and other facilities needed for the performance of the work, the general and local conditions, and all other items which may, in any way, affect the work or its performance
5. That if a corporation, this bid or proposal containing the Non-Collusive Binding Certification and the foregoing Affirmation and Declaration has been authorized by the Board of Directors of such Corporation, which authorization includes the signing and submission of this bid or proposal and the inclusion therein of the said Certificate of Non-Collusion and Affirmation and Declaration as the Act and Deed of the Corporation.

BID FORM SIGNATURE(S)

_____
Signature

Corporate Seal

Company Name:_____

was hereunto affixed in the presence of:

_____

Subscribed and sworn before me this day of _____ 2022

Notary Public:_____

My Commission Expires:_____

CONTRACTOR'S QUALIFICATION STATEMENT

With the submittal of the Bid Proposal Form (Section 00 0400), the bidder shall attach this Contractor's Qualification Statement and shall answer the Questions herein. Failure to answer these questions in full may be cause for rejection of the bidder's proposal. **If more space is needed, please attach other sheets with reference to subject paragraph**.

The Board of Education reserves the right to consider, but not limited to, the financial responsibility, experience and reputation in the construction industry, as well as the specific qualifications listed below and elsewhere in this document in considering bids and awarding the contract. The Board of Education reserves the right to waive any informalities if, at its discretion the interest of the Greenwich Public Schools will be better served.

The Undersigned certifies under oath that the information provided herein is true and sufficiently complete so as not to be misleading.

SUBMITTED TO: Greenwich Public Schools

ADDRESS: 290 Greenwich Avenue, Greenwich, CT 06830

SUBMITTED BY:

NAME:

ADDRESS:

PRINCIPAL OFFICE:

NAME OF PROJECT: New Lebanon School Dishwasher Upgrade

TYPE OF WORK (file separate for each Classification of Work)

☐ General Construction
☐ HVAC
☐ Plumbing
☐ Electrical
☐ Fire Alarm
☐ Other _____

1.1 ORGANIZATION

A. How many years has your organization been in business as a Contractor?
B. How many years has your organization been in business under its present business name?
   1. Under what other or former names has your organization operated?
C. What is the firm's bonding range?
   1. Single
   2. Aggregate
D. If your organization is a corporation, answer the following:
   1. Date of Incorporation:
   2. State of Incorporation:
   3. President's name:
   4. Vice-president's name(s):
   5. Secretary's name:
   6. Treasurer's name:

E. If your organization is a partnership, answer the following:
   1. Date of organization:
   2. Type of partnership (if applicable):
   3. Name(s) of general partner(s):
F. If your organization is individually owned, answer the following:
   1. Date of organization:
   2. Name of owner:
G. If the form of your organization is other than those listed above, describe it and name the principals.

1.2 OWNERSHIP, MANAGEMENT, AFFILIATION

A. Identify each person who is or has been within the past five years, an owner of 5.0% or more of the firm's shares, one of the five largest shareholders, a director, an officer, a partner or the proprietor, or a managerial employee.

First Name	MI	Last Name	DOB	% Owned	Director Y or N	Officer Y or N	Title	Partner Y or N

B. Joint Ventures: Provide information for all firms involved. Fill in name, % owned, office held; indicate by Y or N whether director, officer, partner and title.

First Name	MI	Last Name	DOB	% Owned	Director Y or N	Officer Y or N	Title	Partner Y or N

C. Identify any other firms in which now or in the past five years, the firm or any of the individuals listed in questions 1.2.A and 1.2.B above, either owned or owns 5.0% or more of the shares of or was or is one of the five largest shareholders, a director, an officer, a partner or a proprietor of said other firm. ☐ Yes, list below ☐ No
D. Has the firm or any firm listed in response to questions above defaulted or been terminated and its surety called upon to complete, any contract awarded within the past five years ☐ Yes ☐ No. If yes, give date(s), agency(ies)/owner(s), project(s), contract numbers, and describe including the result:
E. List below any projects performed by the bidder in the past five (5) years on which any of the following events occurred:
   1. Were any extension of time requested by the contractor, and were such requests granted?
   2. Was litigation and/or arbitration commenced by either the Owner or the bidder as a result of the work of the project performed by the bidder?
   3. Were any liens filed on the project by subcontractors or material suppliers of the bidder?
   4. Did the bidder make any claims for extra work on the project, and did said claim result in a change order?

Project	Type of Event	Name/Address of Owner	Name & Phone # of Contact Person at Owner

F. For all contracts within the past five years: (a) List all liens or claims over $25,000 filed against the firm and remaining undischarged or unsatisfied for more than 90 days; and (b) list and describe all liquidated damages assessed.

Federal ID No.	% Owned	Firm/Company Name: Position	Company Address

1.3 FINANCIAL INFORMATION

A. Greenwich Public Schools reserves the right to obtain the firm's most recent annual financial statement upon request.

1.4 OTHER INFORMATION

A. Within the past five years has the firm, any affiliate, any predecessor company or entity or any person identified in questions number 1.1 through 1.2 above been the subject of any of the following: (Respond to each question and describe in detail the circumstances of each affirmative answer: (Attach additional pages if necessary).

1. A judgment of conviction for any business-related conduct constituting a crime under state or federal law. No ☐ Yes ☐
2. A criminal investigation or indictment for any business-related conduct constituting a crime under state or federal law? No ☐ Yes ☐
3. An order of protection filed against an officer or employee prohibiting access to jobsite(s) or prohibiting contact with any staff of any owner? No ☐ Yes ☐
4. A grant of immunity for any business-related conduct constituting a crime under state and federal law? No ☐ Yes ☐
5. A federal or state suspension or debarment? No ☐ Yes ☐
6. A rejection of any bid for lack of qualifications, responsibility or because of the submission or an informal, non-responsive or incomplete bid? No ☐ Yes ☐
7. A rejection of any proposed subcontract for lack of qualifications, responsibility or because of the submission or an informal, non-responsive or incomplete bid? No ☐ Yes ☐
8. A denial or revocation of prequalication? No ☐ Yes ☐
9. A voluntary exclusion from bidding/contracting agreement? No ☐ Yes ☐
10. Any administrative proceeding or civil action seeking specific performance or restitution in connection with any public works contract except any disputed work proceeding? No ☐ Yes ☐
11. An OSHA Citation and Notification of Penalty containing a violation classified as serious? No ☐ Yes ☐
12. An OSHA Citation or Notification of Penalty containing a a violation classified as willful? No ☐ Yes ☐
13. A prevailing wage or supplement payment violation? No ☐ Yes ☐
14. A State Labor Law violation deemed willful? No ☐ Yes ☐
15. Any other federal or state Citations, Notices, violation orders, pending administrative hearings or proceedings or determinations of a violation of any labor law or regulation? No ☐ Yes ☐
16. Any criminal investigation, felony indictment or conviction concerning formation of or any business association with, an allegedly false or fraudulent women's, minority or disadvantaged business enterprise? No ☐ Yes ☐
17. Any denial, decertification, revocation or forfeiture of Women's Business Enterprise, Minority Business Enterprise or Disadvantaged Business Enterprise status? No ☐ Yes ☐
18. Rejection of a low bid on a State contract for failure to meet statutory affirmative action M/WBE requirements? No ☐ Yes ☐
19. A consent order with the NYS Department of Environmental Conservation or a federal, state or local government enforcement determination involving a violation of federal or ☐ ☐

state environmental laws?	No		Yes	
20. Any bankruptcy proceeding?	No	☐	Yes	☐
21. Any suspension or revocation of any business or professional license?	No	☐	Yes	☐
22. Any citations, notices, violation orders, pending administrative hearings or proceedings or determinations for violation of:				
Federal, state or local health laws, rules or regulations?	No	☐	Yes	☐
Federal, state or local environmental laws, rules and regulations?	No	☐	Yes	☐
Unemployment insurance or workers compensation coverage or claim requirements?	No	☐	Yes	☐
ERISA (Employee Retirement Income Security Act)?	No	☐	Yes	☐
Federal, state or local human rights laws?	No	☐	Yes	☐
Federal or state security laws?	No	☐	Yes	☐
23. Withdrawal or an agreement to withdraw a bid submitted to a public owner or a request by a public owner to withdraw a bid?	No	☐	Yes	☐
24. During the five year period preceding the submission of this bid, has the bidder been named as a part in any lawsuit in an action involving a claim for personal injury or wrongful death arising from the performance of work related to any project in which it has been engaged? If the answer to the question is yes, list all such lawsuits, the index number associated with said lawsuit and the status of the lawsuit at the time of the submission of this bid.	No	☐	Yes	☐
25. During the five year period preceding the submission of this bid, has the bidder been the subject of proceedings before the Department of Labor for alleged violations of the Labor Law as it related to the payment of prevailing wages and/or supplemental payment requriements? If the answer to the question is yes, list each such instance of the commencement of a Department of Labor proceeding, for which project such proceeding was commenced, and the status of the proceeding at the time of the submission of this bid.	No	☐	Yes	☐
26. During the five year period preceding the submission of this bid, has the bidder been the subject of proceedings involving allegations that it violated the Worker's Compensation Law including but not limited to the failure to provide proof of worker's compensation or disability coverage and/or any lapses thereof? If the answer to the question is yes, list such instsance of violation and the status of the claimed violation at the time of disposition of this bid.	No	☐	Yes	☐
27. Has the bidder, its officers, directors, owner and/or managerial employees been convicted of a crime of been the subject of a criminal indictment during the five years preceding the submission of this bid? If the answer to the question is yes, list the name of the individual convicted or indicted, the charge against the individual and the date of disposition of the charge.	No	☐	Yes	☐
28. During the five year period preceding the submission of this bid, has the bidder been charged with and/or found guilty of any violations of federal, state or municipal environmental and/or health laws, codes, rules and/or regulations? If the answer to the question is yes, list the nature of the charge against the bidder, the date of the charge, and the status of the charge at the time of the submission of this bid.	No	☐	Yes	☐
29. Has the bidder ever defaulted or had its surety called upon to complete any contract awarded within the past five years? If the answer to the question is yes, list the projects, the dates and the nature of the termination (convenience, suspension, for cause).	No	☐	Yes	☐
30. Has any officer or partner of the bidder's organization ever defaulted or had its surety called upon to complete any contract awarded within the past five years or been an office or partner of some other organization that has been terminated from a project by an owner? If yes, state:	No	☐	Yes	☐

Name of Individual	Name of Organization	Reason(s)

B. LICENSING
1. List jurisdictions and trade categories in which your organization is legally qualified to do business, and indicate registration of license numbers, if applicable.
2. List jurisdictions in which your organization's partnership or trade name is filed:
3. Has any director, officer, owner or managerial employee had any professional license suspended or revoked? If the answer is yes, list the name of the individual, the professional license he/she formally had, whether the license was revoked or suspended and the date of the revocation or suspension; No ☐ Yes ☐

1.5 EXPERIENCE
A. List the categories of work that your organization will perform with its own forces:
B. Claims and Suits. (If the answer of any of the questions below is yes, please attach details.)
a. Have you or has any director, officer, owner or managerial employee ever failed to complete any work awarded to them? If yes, list the project(s) the date(s) and the reason(s) for the failure to complete. No ☐ Yes ☐
b. Are there any judgments, claims, arbitration proceedings or suits pending or outstanding against your organization or its officers? No ☐ Yes ☐
c. Has your organization filed any law suits or requested arbitration with regard to construction contracts within the last five years? No ☐ Yes ☐
d. Within the past five years, has any officer or principal of your organization ever been an officer or a principal of another organization when it failed to complete a construction contract? If the answer is yes, please attach details. No ☐ Yes ☐

C. On a separate sheet, list **all** similar construction projects your organization has in progress or completed, giving the name of project, owner, engineer, contract amount, percent complete and scheduled completion date.
1. State total worth of work in progress and under contract:
D. On a separate sheet, list **all** projects, not listed above, that your organization has completed or in progress in the past five years, giving the name of the project, owner, engineer, contract amount, date of completion and percentage of the cost of the work performed with your own forces.
1. State average annual amount of construction work performed during the past five years:
E. On a separate sheet, list the construction experience and present commitment of the key individuals of your organization.

1.6 REFERENCES
A. Trade reference:
B. Bank references:
C. Surety:
1. Name of present bonding company:
2. Name and address of agent:
3. Name or previous bonding company:

1.7 CERTIFICATION

A. The undersigned recognizes that this questionnaire is submitted for the purpose of the Greenwich Public Schools (Owner) to award a contract or approve a subcontract; acknowledges that the Owner may in its discretion, by means which it may choose, determine the truth and accuracy of all statements made herein; acknowledge that intentional submission of false or misleading information may constitute a felony, or a misdemeanor, and may also be punishable by a fine or imprisonment; and states that the information submitted

B. in this questionnaire and any attached pages is true, accurate and complete.
Dated at this day of _____

_____
Name of Organization:

_____
By:

_____
Title:

SWORN AND SUBSCRIBED TO BEFORE ME, A NOTARY PUBLIC, IN AND FOR

THE COUNTY OF _____ AND THE STATE OF _____

THIS _____ DAY OF _____, 2022

_____ MY COMMISSION EXPIRES_____
NOTARY PUBLIC

NON-COLLUSION AFFIDAVIT

GREENWICH PUBLIC SCHOOLS

290 GREENWICH AVE

GREENWICH, CONNECTICUT

State of _____:

County of _____:s.s.

I state that I am the_____ of _____
(TITLE) (NAME OF MY FIRM)
and that I am authorized to make this affidavit on behalf of my firm, and its owners, directors, and officers. I am the person responsible in my firm for the price(s) and the amount of this bid.

I state that:

1) The price(s) and amount of this bid have been arrived at independently and without consultation, communication, or agreement with any other contractor, bidder/proposer, or potential bidder/proposer.

2) Neither the price(s) nor the amount of this bid/rfp, and neither the approximate price(s) nor approximate amount of this bid/rfp, have been disclosed to any other firm or person who is a bidder/proposer or potential bidder/proposer, and they will not be disclosed before bid/rfp opening.

3) No attempt has been made or will be made to induce any firm or person to refrain from bidding/proposing on this contract, or to submit a bid/proposal higher than this bid/rfp, or to submit any intentionally high or noncompetitive bid/rfp or other form of complementary bid/rfp.

4) I fully understand that more than one offer from an individual, firm partnership, corporation, or association under the same or different name will be rejected. Reasonable grounds for believing that a bidder/proposer is interested in more than one bid/rfp for the work contemplated may cause rejection of all bids/rfps in which the bidder/proposer is interested. Any or all bidders/proposers will be rejected if there is any reason for believing that collusion exists among the bidders/proposers. Participants in such collusion may not be considered in future offers for the same work. Each bidder/proposer by submitting a bid/proposal certifies that it is not party to any collusive action.

5) The bid/rfp of my firm is made in good faith and not pursuant to any agreement or discussion with, or inducement from, any firm or person to submit a complementary or other noncompetitive bid/proposal.

6) _____its affiliates, subsidiaries, officers,
(NAME OF MY FIRM)
directors and employees are not currently under investigation by any governmental agency and have not in the last four years been convicted or found liable for any act prohibited by State or Federal law in any jurisdiction, involving conspiracy or collusion with respect to bidding/proposing on any public contract, except as follows:

7) I state that _____ understands and acknowledges that the above
(NAME OF MY FIRM)
representations are material and important, and will be relied on by Greenwich Public Schools in awarding the bid/proposal for which this is submitted. I understand and my firm understands that any misstatement in this affidavit is and shall be treated as fraudulent concealment from Greenwich Public Schools of the true facts relating to the submission of bids/proposals for this contract.

8) I agree to furnish and deliver all services on the date and time agreed on by
_____ and the Greenwich Board of Education at the time the
(NAME OF MY FIRM)
purchase order is placed. Furthermore, there will not be any cancellations to the Board of Education. If a bidder/proposer submits a bid/proposer on any item he/she will be responsible for delivering that item at the bid/proposal cost, in accordance with the attached above specifications, which were submitted with this bid/proposal and upon which the bid/proposal was made.

9) In submitting this bid/proposal, the undersigned declares that this is made without any connection with any persons making another bid/proposal on the same contract; that the bid/proposal is in all respects fair and without collusion, fraud or mental reservation; and that no official of the Town, or any person in the employ of the Town, is directly or indirectly interested in said bid/proposal or in the supplies or work to which it relates, or in any portion of the profits thereof.

10) In submitting this bid, the undersigned further declares that it has not, and will not, induce or attempt to induce any Town of Greenwich employee or officer to violate the Greenwich Code of Ethics in connection with its offer to provide goods or services under, or otherwise in the performance of such contract.

11) The undersigned further understands that the above declarations are material representations to the Town of Greenwich made as a condition to the acceptance of the bid/proposal. If found to be false, the Town of Greenwich retains the right to reject said bid/proposal and rescind any resultant contract and/or purchase order and notify the undersigned accordingly, thereby declaring as void said bid/proposal and contract or purchase order.

12) The Greenwich Code of Ethics can be found at www.greenwichct.org. Code of Ethics stated as follows:

a. DEFINITION.

i. Indirect interest, without limiting its generality, shall mean and include the interest of any subcontractor in any prime contract with the Town and the interest of any person or his immediate family in any corporation, firm or partnership which as a direct or indirect interest in any transaction with the Town.

ii. Substantial financial interest shall mean any financial interest, direct or indirect, which is more than nominal and which is not common to the interest of other citizens of the Town.

iii. Town Officer shall mean and include any official, commission, committee, legislative body or other agency of the Town.

iv. Transaction shall mean and include the offer, sale or furnishing of any real or personal property, material, supplies otherwise, for the use and benefit of the Town for a valuable consideration, excepting the services of any person as a Town Officer.

b. GIFTS AND FAVORS. No Town Officer or his immediate family shall accept any valuable gift, things, favor, loan or promise which might tend to influence the performance or nonperformance of his official duties.

c. IMPROPER INFLUENCE. No Town Officer having a substantial financial interest in any transaction with the Town or in any action to be taken by the Town shall use is office to exert his influence or to vote on such transaction or action.

VENDOR INFORMATION. (Please print the following)

_____

VENDOR NAME

_____

ADDRESS

_____

TELEPHONE FAX #

_____

E-MAIL WEB SITE

_____

AUTHORIZED SIGNATURE TITLE

13) By signing this bid/proposal the bidder/proposer understands and agrees to the attached terms, conditions, and specifications, including Collusion among Bidders/Proposers Employment Discrimination by the Contractor Prohibited.

_____

SIGNATURE

REFERENCES

List at least five (5) references for similar projects in size, scope, and complexity, within Connecticut and/or New York.

THIS PAGE MUST BE COMPLETED AND SUBMITTED WITH YOUR BID.

1) Client_____

Project Address_____

Approximate $ Value _____ Date: Started _____ Completed _____

Contact: Name _____Telephone # _____

2) Client_____

Project Address_____

Approximate $ Value _____ Date: Started _____ Completed _____

Contact: Name _____Telephone # _____

3) Client_____

Project Address_____

Approximate $ Value _____ Date: Started _____ Completed _____

Contact: Name _____Telephone # _____

4) Client_____

Project Address_____

Approximate $ Value _____ Date: Started _____ Completed _____

Contact: Name _____Telephone # _____

5) Client_____

Project Address_____

Approximate $ Value _____ Date: Started _____ Completed _____

Contact: Name _____Telephone # _____

FORM OF BID BOND

TOWN OF GREENWICH, CONNECTICUT
BID BOND

_____
Date Bond Executed

_____
Principal

_____
Surety

_____
Penal Sum of Bond (express in words and figures) Date of Bid

_____

KNOW ALL MEN BY THESE PRESENTS, that we, the principal and surety above named, are held and firmly bound unto the Town of Greenwich, Connecticut, in the penal sum of the amount stated above, for the payment of which sum well and truly to be made, we bind ourselves, our heirs, executors, administrators, and successors, jointly and severally, firmly by these presents, THE CONDITION OF THIS OBLIGATION IS SUCH, that whereas the principal has submitted the accompanying bid, dated as shown above for _____.
(name of bid)

_____

NOW THEREFORE, if the principal shall not withdraw said bid within the period specified therein after the opening of the same, or if no period be specified, within sixty (60) days after said opening, and shall within the period specified therefor, or if no period specified, within ten (10) days after the prescribed forms are presented to him for signature, execute such further contractual documents, if any, as may be required by the term of the Bid as accepted, and give bonds with good and sufficient surety or sureties as may be required, for the faithful performance and proper fulfillment of the resulting contract, and for the protection of all person supplying labor and material in the prosecution of the work provided for in such contract or in the event of the withdrawal of said bid within the period specified, or the failure to enter into such contract and give such bonds within the time specified, if the principal shall pay the Town of Greenwich, Connecticut, the difference between the amount specified in said bid and the amount for which said Town may procure the required work, supplies, and services, if the latter amount be in excess of the former, then the above obligation shall be void and of no effect, otherwise to remain in full force and virtue.

IN WITNESS WHEREOF the above bounden parties have executed this instrument under their several seals on the date indicated above. The name and corporate seal (if applicable) of each corporate party being hereto affixed:

FORM OF BID BOND

00 0472 - 1

_____
Name of Partnership

_____ (SEAL)

Business Address

_____
Partner- (Hereunto Duly Authorized)

IN THE PRESENCE OF:

WITNESS INDIVIDUAL PRINCIPAL

1._____AS TO_____ (SEAL)

2._____AS TO_____ (SEAL)

3._____AS TO_____ (SEAL)

4._____AS TO_____ (SEAL)

_____ AFFIX CORPORATE SEAL
CORPORATE/ LLC PRINCIPAL

_____
BUSINESS ADDRESS

_____
WITNESS

_____
BY- (HEREUNTO DULY AUTHORIZED)

_____
TITLE

_____ AFFIX CORPORATE SEAL
CORPORATE/ LLC PRINCIPAL

_____
BUSINESS ADDRESS

_____
WITNESS

_____
BY- (HEREUNTO DULY AUTHORIZED)

_____
TITLE

CERTIFICATE AS TO CORPORATE PRINCIPAL

I, _____, certify that I am the _____ of the corporation named as principal in the within bond; that _____, who signed said bond on behalf of the principal, was then _____ of the corporation; that I know his signature, and his signature thereto is genuine; and that said bond was duly signed, sealed and attested for and in behalf of said corporation by authority of its governing body.

_____
(Corporate Seal)

PERFORMANCE, MAINTENANCE AND PAYMENT BOND

BOND NO. _____ CONTRACT NO. _____

KNOW ALL MEN BY THESE PRESENTS. That we _____

_____, as Principal, and _____

a corporation organized under the laws of the State of_____ and authorized to do business in the State of Connecticut as Surety, for holden and firmly bound jointly and severally unto the Town of Greenwich, Connecticut, herein referred to as the Town, the territorial corporation located in the County of Fairfield, in the penal sum of

_____ Dollars ($_____),

to be paid to it or its certain attorney, successors or assigns, to which payment well and truly to be made, we the said Obligors do bind ourselves, and each of us, our heirs, executors, administrators, and successors firmly by these presents.

IN WITNESS WHEREOF we have hereunto set for cause to be set our respective hands, names and seals this

_____ day of _____, 20___

The condition of this obligation is such, that whereas the above named Principal has entered into a certain written contract with the Town of Greenwich, Connecticut, dated the

_____ day of _____, 20___

NOW, THEREFORE, if the said Principal shall well and faithfully perform said contract according to its provisions, and fully indemnify and save harmless the Town from all costs and damages which the Town may suffer by reason of failure so to do, and shall pay for all equipment, appurtenances, materials and labor furnished, used or employed in the execution of said contract, and shall indemnify and save harmless the Town from all suits or claims of any nature or description against the Town by reason of any injuries or damages sustained by any person or persons on account of any act or omission of said Principal, his servants or agents, or his subcontractors in the construction of the work or in guarding the work, or on account of the use of faulty or improper materials, or by reason of claims under the Workmen's Compensation Laws or other laws by any employee of the Principal or his subcontractors, or by reason of the use of patented material, machinery, device, equipment, process, method of construction or design in any way involved in the work, and shall indemnify the Town against such defective workmanship, material and equipment as may be discovered within one (1) year after completion and final acceptance of the work, and shall make good in such defective workmanship and material as may be discovered within said period of one (1) year, then the obligation shall be void, otherwise to remain in full force and effect.

The Surety hereby stipulates and agrees that any modifications, omissions or additions in or to the terms of the aforesaid contract, or in or to the plans or specifications therefor, or any extension of time, shall in no wise affect the obligation of the Surety under this bond, the surety hereby waiving any and all right to any notice of any such modifications, omissions, changes, additions or extensions.

Contractor Name:_____ By:_____

Surety Name:_____ By:_____

INSURANCE PROCEDURE

PLEASE NOTE:

THIS PAGE MUST BE RETURNED WITH YOUR BID/RFP. FAILURE TO DO SO MAY RESULT IN YOUR BID/RFP BEING REJECTED.

Please take the insurance requirements of the Contract to your agent/broker immediately upon receipt of the bid documents to determine your existing coverage and any costs for new or additional coverage required for the work noted in this Request for BID/RFP. Any BID/RFP with deficient insurance requirements will be rejected.

STATEMENT OF VENDOR:

I have read the insurance requirements for this work and have taken the documentation to my insurance agent/broker. The BID/RFP cost reflects any additional costs relating to insurance requirements for this work.

_____ _____

Signature Date

Insurance Requirement Sheet

Insurance Requirements: Before starting and until final completion and acceptance of the work called for in the Contract and expiration of the guarantee period provided for in the Contract, the Contractor and its subcontractors, if any, shall procure and maintain insurance of the types and amounts checked in paragraphs A through F below for all Contract operations.

☒ **A. General Liability, with minimum coverages for combined bodily injury and property damage liability of $2,000,000 general aggregate, $1,000,000 per occurrence including:**

- ☒ **1. Commercial General Liability.**
- ☒ **2. Town as additional insured.**
- ☐ **3. Owners and Contractors Protective Liability (separate policy in the name of the Town).**

☒ **B. Comprehensive Automobile Liability, with minimum coverages of $1,000,000 combined single limit for bodily injury and property damage, including, where applicable, coverage for any vehicle, all owned vehicles, scheduled vehicles, hired vehicles, non-owned vehicles and garage liability.**

☒ **C. Excess Liability, with minimum coverage of $5,000,000 in umbrella form, or such other form as approved by Town Department Head and Risk Management Director.**

☒ **D. Workers' Compensation and Employer's Liability, with minimum coverages as provided by Connecticut State Statutes.**

☐ **E. Professional Liability (for design and other professionals for Errors and Omissions), with minimum coverage of $1,000,000. If the policy is on a claims-made basis, coverage shall be continually renewed or extended for three (3) years after work is completed under the Contract.**

☐ **F. Other (Builder's Risk, etc.):_____.**

☒ **G. CERTIFICATE HOLDER: TOWN OF GREENWICH**
ATTN: BOARD OF EDUCATION. (Also fill in on ACORD Certificate of Insurance)
101 Field Point Road, Greenwich, CT 06830.

The **Acord certificate of insurance form** must be executed by your insurance agent/broker and returned to this office. The most current Acord form should be used for insurance documentation purposes. Company name and address must conform on all documents including insurance documentation. It is required that the agent/broker note the individual insurance companies providing coverage, rather than the insurance group, on the Acord form. The Contract number (provided to the awarded Contractor), project name and a brief description must be inserted in the "Description of Operations" field. It must be confirmed on the Acord Form that the Town of Greenwich and Greenwich Public Schools is endorsed as an additional insured by having the appropriate box checked off and stating such in the "Description of Operations" field. **A letter from the awarded vendor's agent/broker certifying that the Town of Greenwich, The Greenwich Board of Education and Landmark Facilities Group have been endorsed onto the general liability policy as an additional insured is also mandatory. This letter must follow exactly the format provided by the Purchasing Department and must be signed by the same individual authorized representative who signed the Acord form, both of which must be signed with original ink "wet" signatures**. If the insurance coverage required is provided on more than one Acord certificate of insurance, then additional agent/broker letters are also required. Contract development will begin upon receipt of complete, correct insurance documentation.

The Contractor shall be responsible for maintaining the above insurance coverages in force to secure all of the Contractor's obligations under the Contract with an insurance company or companies with an AM Best Rating of A:VII or better, licensed to write such insurance in Connecticut and acceptable to the Risk Manager, Town of Greenwich. For excess liability only, non-admitted insurers are acceptable, provided they are permitted to do business through Connecticut excess line brokers per listing on the current list of Licensed Insurance Companies, Approved Reinsurers, Surplus Lines Insurers and Risk Retention Groups issued by the State of Connecticut Insurance Department.

(SAMPLE ENDORSEMENT LETTER)

AGENT/BROKER
(LETTERHEAD)

(Date)

Eugene H. Watts, Senior Buyer
Purchasing Department
Town of Greenwich/Board of Education
290 Greenwich Ave – Havemeyer Building
Greenwich, CT 06830

Re: Contract # _____

Dear Mr. Watts:

The undersigned hereby certifies as follows:

(1) I am a duly licensed insurance agent under the laws of the State of **[insert State]** and an authorized representative of all companies affording coverage under the Acord form submitted herewith;

(2) The Town of Greenwich, the Greenwich Board of Education, and Landmark Facilities Group have been endorsed as an additional insured under the general liability policy no. [insert policy number], issued by **[insert company affording coverage] to [name of insured]**;

(3) The general liability policy referenced in paragraph (2) above meets or exceeds the coverage in Commercial General Liability ISO form CG 00 01 10 01, including contractual liability;

(4) The policies listed in the Acord form submitted to the Town of Greenwich in connection with the above-referenced contract have been issued to the insured in the amounts stated and for the periods indicated in the Acord form; and

(5) The Town of Greenwich shall be given thirty (30) days prior written notice of cancellation, lapse or restrictive amendment (except ten days notice of nonpayment) of the policies listed in the Acord form.

Sincerely,

Authorized Representative for all companies listed in the Acord form
(Acord & Endorsement Letter must be signed by the same individual in blue ink)

ACORD

CERTIFICATE OF LIABILITY INSURANCE

PRODUCER	THIS CERTIFICATE IS ISSUED AS A MATTER OF INFORMATION ONLY AND CONFERS NO RIGHTS UPON THE CERTIFICATE HOLDER, THIS CERTIFICATE DOES NOT AMEND, EXTEND OR ALTER THE COVERAGE AFFORDED BY THE POLICIES BELOW.
	INSUREERS AFFORDING COVERAGE
Vendor Name & Address Contract # _____	INSURER A:
	INSURER B:
	INSURER C:
	INSURER D:
	INSURER E:

COVERAGES

THE POLICIES OF INSURANCE LISTED BELOW HAVE BEEN ISSUED TO THE INSURED NAMED ABOVE FOR THE POLICY PERIOD INDICATED, NOTWITHSTANDING ANY REQUIREMENT, TERM OF CONDITION OF ANY CONTRACT OR OTHER DOCUMENT WITH RESPECT TO WHICH THIS CERTIFICATE MAY BE ISSUED OR MAY PERTAIN, THE INSURANCE AFFORDED BY THE POLICIES DESCRIBED HEREIN IS SUBJECT TO ALL THE TERMS, EXCLUSIONS AND CONDITIONS OF SUCH POLICIES. LIMITS SHOWN MAY HAVE BEEN REDUCED BY PAID CLAIMS.

INSR	TYPE OF INSURANCE	POLICY NUMBER	POLICY EFFECTIVE DATE(MM/DD/YY)	POLICY EXPIRATION DATE(MM/DD/YY)	LIMITS	
	GENERAL LIABILITY COMMERCIAL GENERAL LIABILITY ☐ CLAIMS MADE ☒ OCCUR ☐_____ ☐_____ GENERAL AGGREGATE LIMIT APPLIES PER: ☐ POLICY ☐PROJECT ☐ LOC				EACH OCCURENCE	$1,000,000
					FIRE DAMAGE (Any one fire)	
					MED EXP (Any one person)	
					PERSONAL & ADV INJURY	
					GENERAL AGGRREGATE	$2,000,000
					PRODUCTS-COMP/OP AGG	
	AUTOMOBILE LIABILITY ☐ ANY AUTO ALL OWNED AUTOS ANY PROPRIETOR/PARTNER/ EXECUTIVE SCHEDULED AUTOS HIRED AUTOS NON-OWNED AUTOS ☐_____ ☐				COMBINED SINGLE LIMIT (Ea accident)	$1,000,000
					BODILY INJURY (Per person)	
					BODILY INJURY (Per accident)	
					PROPERTY DAMAGE (Per accident)	
	GARAGE LIABILITY ☐ ANY AUTO ☐				AUTO ONLY-EA ACCIDENT	
					OTHER THAN AUTO ONLY:	EA ACC AGG
	EXCESS LIABILITY ☐ OCCUR ☐ CLAIMS MADE ☐ DEDUCTIBLE ☐ RETENTION $				EACH OCCURRENCE	$5,000,000
					AGGREGATE	$5,000,000
	WORKERS COMPENSATION AND EMPLOYERS' LIABILITY ANY PROPRIETOR/PARTNER/ EXECUTIVE/OFFICER/ MEMBER EXCLUDED? (Mandatory in NH) If yes, describe under DESCRIPTION OF OPERATION below. — Y/N ☐				X PER STATUTE	OTHER
					E.L. EACH ACCIDENT	
					E.L. DISEASE-EA EMPLOYEE	
					E.L. DISEASE – POLICY LIMIT	
	Professional Liability					

DESCRIPTION OF OPERATIONS/LOCATIONS/VEHICLES/EXCLUSIONS ADDED BY ENDORSEMENT/SPECIAL PROVISIONS

The Town of Greenwich, The Greenwich Board of Education, and Landmark Facilities Group, Inc. are named as additional insured for Contract #._____. It is agreed by all parties to Contract # _____ that the Contractors insurance will be primary and non-contributory.

CERTIFICATE HOLDER	X	ADDITIONAL INSURED; INSURER LETTER: __	CANCELLATION
Certificate Holder: Town of Greenwich and Greenwich Board of Education 101 Field Point Road Greenwich, CT 06830			SHOULD ANY OF THE ABOVE-DESCRIBED POLICIES BE CANCELLED BEFORE THE EXPIRATION DATE THEREOF, THE ISSUING COMPANY WILL ENDEAVOR TO MAIL 30 DAYS WRITTEN NOTICE TO THE CERTIFICATE HOLDER NAMED TO THE LEFT, BUT FAILURE TO DO SO SHALL IMPOSE NO OBLIGATION OR LIABILITY OF ANY KIND UPON THE INSURER, ITS AGENTS OF REPRESENTATIONS
			AUTHORIZED REPRESENTATIVE

A.M. BEST KEY RATING GUIDE FORM

The following insurance companies are licensed in the State of Connecticut per the 2021 edition of the **A.M. Best Key Rating Guide For Property and Casualty,**

1. Company Name: _____
    a. Page Number: _____
    b. Rating is: _____
2. Company Name: _____
    a. Page Number: _____
    b. Rating is: _____
3. Company Name: _____
    a. Page Number: _____
    b. Rating is: _____
4. Company Name: _____
    a. Page Number: _____
    b. Rating is: _____
5. Company Name: _____
    a. Page Number: _____
    b. Rating is: _____

AFFIRMATIVE ACTION COMPLIANCE AFFIDAVIT

COMMISSION ON HUMAN RIGHTS AND OPPORTUNITIES
CONTRACT COMPLIANCE REGULATIONS
NOTIFICATION TO BIDDERS

AFFIRMATIVE ACTION COMPLIANCE AFFIDAVIT

The contract to be awarded is subject to contract compliance requirements mandated by Sections 4a-60 and 4a-60a of the Connecticut General Statutes; and, when the awarding agency is the State, Sections 46a-71(d) and 46a-81i(d) of the Connecticut General Statutes. There are Contract Compliance Regulations codified at Section 46a-68j-21 through 43 of the Regulations of Connecticut State Agencies, which establish a procedure for awarding all contracts covered by Sections 4a-60 and 46a-71(d) of the Connecticut General Statutes. According to Section 46a-68j-30(9) of the Contract Compliance Regulations, every agency awarding a contract subject to the contract compliance requirements has an obligation to "aggressively solicit the participation of legitimate minority business enterprises as bidders, contractors, subcontractors and suppliers of materials." "Minority business enterprise" is defined in Section 4a-60 of the Connecticut General Statutes as a business wherein fifty-one percent or more of the capital stock, or assets belong to a person or persons: "(1) Who are active in daily affairs of the enterprise; (2) who have the power to direct the management and policies of the enterprise; and (3) who are members of a minority, as such term is defined in subsection (a) of Section 32-9n." "Minority" groups are defined in Section 32-9n of the Connecticut General Statutes as "(1) Black Americans . . .(2) Hispanic Americans . . . (3) persons who have origins in the Iberian Peninsula . . . (4)Women . . . (5) Asian Pacific Americans and Pacific Islanders; (6) American Indians . . ." An individual with a disability is also a minority business enterprise as provided by Section 4a-60g of the Connecticut General Statutes. The above definitions apply to the contract compliance requirements by virtue of Section 46a-68j-21(11) of the Contract Compliance Regulations.

The awarding agency will consider the following factors when reviewing the bidder's qualifications under the contract compliance requirements:

(a) the bidder's success in implementing an affirmative action plan;

(b) the bidder's success in developing an apprenticeship program complying with Sections 46a-68-1 to 46a-68-17 of the Administrative Regulations of Connecticut State Agencies, inclusive;

(c) the bidder's promise to develop and implement a successful affirmative action plan;

(d) the bidder's submission of employment statistics contained in the "Employment Information Form", indicating that the composition of its workforce is at or near parity when compared to the racial and sexual composition of the workforce in the relevant labor market area; and

(e)the bidder's promise to set aside a portion of the contract for legitimate minority business enterprises. See Section 46a-68j-30(10)(E) of the Contract Compliance Regulations.

***INSTRUCTIONS:** Bidders must sign acknowledgement below and return acknowledgement to Awarding Agency along with bid proposal.

The undersigned acknowledges receiving and reading a copy of the "Notification to Bidders" form.

_____ _____

Signature Date

On behalf of:

_____

_____

_____

CONSENT OF SURETY

The Undersigned surety, being the surety which issued bonds No._____ for the Town of Greenwich Contract No. _____ hereby consents to release of final payment and all retainages to the contractor-principal.

(Name of Surety)

By_____
Its

ACKNOWLEDGMENT

STATE OF

ss:

COUNTY OF

This is to certify the above signatory who executed this instrument was either known to me or satisfactorily proven to me to be the person whom he purports to be.

_____
Notary Public

AFFIDAVIT FOR FINAL PAYMENT

The undersigned, being duly sworn, deposes and says:

1. That he is the _____ of the contractor in
(Title)
the project hereinafter referred to and is authorized to execute this affidavit on behalf of the contractor;

2. In connection with Contract # for _____
(Project Title)
it is represented that all payrolls, bills for services, materials, supplies, equipment, and other indebtedness have been paid or otherwise satisfied and that there are no outstanding claims against the undersigned by any sub-contractor or material supplier, or no outstanding claims or intent to file a claim against the Town of Greenwich.

This Affidavit is made at the request of the Town of Greenwich for the purpose of inducing final payment and knowing that it will rely upon the truth of the representation herein made.

_____
(Authorized signature)

_____
(Type or print name of authorized person)

Subscribed and sworn to before me, a Notary

Public, in and for the County of _____

and State of _____, this _____day

of _____, 2022

_____
Notary Public

LIST OF DRAWINGS

SECTION / DRAWING NO.	DESCRIPTION
T-001	COVER SHEET
P-001	PLUMBING NOTES AND DELIVERY
P-100	PLUMBING PLAN
P-200	PLUMBING SPECIFICATIONS
E-001	ELECTRICAL NOTES AND SCHEDULES
E-100	ELECTRICAL PLAN
E-200	ELECTRICAL SPECIFICATIONS

Department of Revenue Services
State of Connecticut
Attn: Discovery Unit
25 Sigourney Street
Hartford CT 06106-5032
(New 09/03)

Form AU-764

Deposit by a Person Doing Business With a Nonresident Contractor

Purpose: A person doing business with a nonresident contractor uses **Form AU-764** to deposit 5% of the total contract price with the Department of Revenue Services (DRS) for a specific project in the state. The deposit ensures all taxes due to the State of Connecticut from the contractor are paid to DRS. Read the instructions on the reverse side before you complete this form. If you need help, call **860-541-3280**, Monday through Friday, 8:00 a.m. to 5:00 p.m., and choose Option 7.

Part I: Nonresident Contractor Information

Name	Connecticut Tax Registration No.
Address (Street or PO Box, City, State, and ZIP Code)	

Part II: Person Doing Business With a Nonresident Contractor Information

Name	Connecticut Tax Registration No., Federal ID No., or SSN
Address (Street or PO Box, City, State, and ZIP Code)	

Part III: Project Information

Physical Location of Project (Street, City or Town)	Name of Project

Commencement Date	Completion Date for Nonresident Contractor	Total Contract Price or Amount of Change Order ☐ Check the box if this deposit is for a change order	Amount of Deposit

Conditions of the deposit for the project detailed above:

- The nonresident contractor has entered into a contract related to real property at a Connecticut location.
- The person doing business with the nonresident contractor is depositing 5% of the total contract price with DRS to ensure all taxes that become due and owing during the period of the contract will be paid.
- The deposit is made within 30 days of the completion of the project.
- The deposit will be returned to the nonresident contractor upon written request by the contractor after DRS has examined its records and determined all taxes, interest, and penalties due during the term of the contract have been paid.
- The person doing business with the nonresident contractor must attach a copy of the final periodic billing to **Form AU-764**.

Declaration: I, an authorized agent of the person doing business with a nonresident contractor named above, declare under the penalty of law that I have examined **Form AU-764** and, to the best of my knowledge and belief it is true, complete, and correct. I understand the penalty for willfully delivering a false document or return to DRS is a fine of not more than $5,000, or imprisonment for not more than five years, or both.

Print Name	Title
Authorized Signature	Date

Receipt of Deposit: DRS acknowledges receipt of $ _____ from the person named above as doing business with a nonresident contractor related to real property at the Connecticut location noted above.

Signature of Authorized DRS Representative	Telephone	Date

General Instructions

A person doing business with a nonresident contractor working in Connecticut must submit **Form AU-764**, *Deposit by a Person Doing Business With a Nonresident Contractor*, with a deposit of 5% of the total contract price, including change orders and add-ons, not later than 30 days after the completion of the contract. This applies to all contracts with nonresident contractors, regardless of the nature of the real property affected or the tax-exempt status of the property owner. For more information, see **Special Notice 2003(20)**, *Legislation Affecting Contracts With Nonresident Contractors.*

A *nonresident contractor* is a contractor who does not maintain a regular place of business in this state. A *regular place of business* means any bona fide office, factory, warehouse, or other space in Connecticut at which a contractor is doing business in its own name in a regular and systematic manner, and which place is continuously maintained, occupied, and used by the contractor in carrying on its business through its employees regularly in attendance to carry on the contractor's business in the contractor's own name. A regular place of business does not include a place of business for a statutory agent for service of process or a temporary office whether or not it is located at the site of construction. A regular place of business also does not include locations used by the contractor only for the duration of the contract, such as short-term leased offices, warehouses, storage facilities, or facilities that do not have full time staff with regular business hours. An office maintained, occupied and used by a person affiliated with a contractor is not a regular place of business of the contractor.

Specific Instructions

Part I: Enter the name and complete address of the nonresident contractor on whose behalf the deposit is being made. Include the nonresident contractor's Connecticut tax registration number.

Part II: Enter the name and complete address of the person doing business with the nonresident contractor. If the nonresident contractor is the general contractor, enter the name and address of the owner of the property. If the nonresident contractor is a subcontractor, enter the name and address of the general contractor.

Enter the Connecticut tax registration number of the person doing business with the nonresident contractor. If the person doing business with the nonresident contractor does not have a Connecticut tax registration number, enter that person's Federal Employer Identification Number or Social Security Number.

Part III: Enter the name of the project and the complete address, including the street address and the city or town where the project is physically located.

Enter the commencement date of this project. The commencement date is the date the contract is signed or the date the nonresident contractor begins work on the project, but it is never later than the date the nonresident contractor begins work.

Enter the date on which work on this project was completed, which is the date the final periodic billing for the contract was made by the nonresident contractor. Note the final periodic billing may be due before payment of any retainage becomes due. The person making the deposit must attach a copy of the final periodic billing to **Form AU-764.**

If this is a deposit for a change order occurring after the deposit for the initial contract has been remitted to DRS, enter the additional amount being deposited for the change order and check the box. For a change order made after the final periodic billing for the original contract, the change order is deemed complete when it is billed by the nonresident contractor. Attach a copy of the final billing for the change order.

Enter, in words and figures, the total amount paid to the nonresident contractor under the contract or for the change order. Check the box if the deposit is for a change order.

Multiply the total contract price or the amount of the change order by 5% (.05) and enter the result on this line.

Declaration: An authorized representative of the person doing business with a nonresident contractor must sign and date the declaration. Return **Form AU-764**, with the copy of the final periodic billing, to:

Department of Revenue Services
State of Connecticut
Discovery Unit
25 Sigourney Street
Hartford CT 06106

Receipt: DRS will acknowledge receipt of the deposit by completing the bottom of Form AU-764 and returning a copy of it to the person making the deposit. Unless indicated otherwise, the person doing business with the nonresident contractor will not be liable for any claim of the nonresident contractor for the amount or for any claim of DRS for any taxes arising from the activities of the nonresident contractor on the project for which the bond deposit was made, once DRS has verified that total deposits represent 5% of the total contract price paid to the nonresident contractor for this project, including any change orders, and that the deposit is made within 30 days of completion of the project.

Department of Revenue Services
State of Connecticut
PO Box 2937
Hartford CT 06104-2937
(Rev. 12/12)

Form REG-1
Business Taxes Registration Application

DRS use only Connecticut Tax Registration Number

1. Reason for Filing Form REG-1 Check the applicable box:

- ☐ Opening a new business including but not limited to:
  a. An existing out-of-state business opening a location in Connecticut;
  b. Selling at a craft show, flea market, fair, or other venue in Connecticut or selling over the Internet; **or**
  c. An existing out-of-state business having employees in Connecticut (including nonresident contractors and loan-out companies).
- ☐ Opening a new location. **Enter your Connecticut Tax Registration No:** _____
- ☐ Registering for additional taxes. **Enter your Connecticut Tax Registration No:** _____
- ☐ Reopening a closed business.
  Enter Connecticut Tax Registration No. of the closed business: _____
- ☐ Purchasing an ongoing business. The buyer of an existing business may be responsible for tax liabilities of the previous owner. See the Informational Publication on Successor Liability for Sales and Use Taxes, Admissions and Dues Tax, and Connecticut Income Tax Withholding, on the DRS website.
  Enter Connecticut Tax Registration No. of the previous owner: _____
- ☐ Forming a business entity under Connecticut law or a non-Connecticut entity required to register with or to obtain a certificate of authority from the Connecticut Secretary of the State before transacting business in Connecticut.
- ☐ Establishing a passive investment company (PIC).
- ☐ Changing organization type. **Enter your current Connecticut Tax Registration No:** _____
- ☐ Hiring household employees and intend to withhold Connecticut income tax.
- ☐ Other (explain); see *Who Needs to Complete REG-1*. _____

2. Business Information: Type of organization

- ☐ Sole proprietorship
- ☐ General partnership
- ☐ Limited liability partnership (LLP)
- ☐ Limited partnership (LP)
- ☐ Limited partnership taxed as a corporation
- ☐ Single member LLC (SMLLC)
- ☐ Single member LLC taxed as a corporation
- ☐ Single member LLC taxed as an S corporation
- ☐ Limited liability company (LLC) taxed as a partnership
- ☐ Limited liability company (LLC) taxed as a corporation
- ☐ Limited liability company (LLC) taxed as an S corporation
- ☐ Corporation
- ☐ S Corporation
- ☐ Qualified subchapter S subsidiary (QSSS)
- ☐ Other (explain): _____

3. Nature of Business Activity
Check the box(es) that best describe your business:
☐ Retailer ☐ Wholesaler ☐ Manufacturer ☐ Service provider ☐ Other (explain): _____

4. Major Business Activity
Describe your major business activities:
_____

5. Business Name and Address

Organization name: Enter the name of the sole proprietor, partnership, corporation, or LLC.	Federal Employer Identification Number, if applicable
Business trade name	CT Secretary of the State Business ID No., if applicable

Business Location: Enter the physical address of the business. A post office box or rural route number is not acceptable. Home-based businesses and flea market or craft show vendors must enter a home address.

Address line 1	Address line 2	
City	State	ZIP code
Mailing address line 1 (Street or PO Box)	Address line 2	
City	State	ZIP code
Business telephone number	Email address	Bank name

6. List All Owners, Partners, Corporate Officers, or LLC Members Attach a separate sheet if needed.

Name (last, first, middle initial)			Title
Home address line 1 (street)		Home address line 2	
City	State	ZIP code	Home telephone number
SSN	Date of birth	Bank name	

Name (last, first, middle initial)			Title
Home address line 1 (street)		Home address line 2	
City	State	ZIP code	Home telephone number
SSN	Date of birth	Bank name	

Name (last, first, middle initial)			Title
Home address line 1 (street)		Home address line 2	
City	State	ZIP code	Home telephone number
SSN	Date of birth	Bank name	

Name (last, first, middle initial)			Title
Home address line 1 (street)		Home address line 2	
City	State	ZIP code	Home telephone number
SSN	Date of birth	Bank name	

7. Income Tax Withholding

Are you an employer that transacts business or maintains an office in Connecticut and intends to pay wages to resident employees or nonresident employees who work in Connecticut? ..... ☐ Yes ☐ No

If you have a Connecticut tax registration number for withholding for another location and intend to file withholding for this new location under that number, enter that number here: _____ and skip to Section 8; otherwise continue.

Are you an out-of-state company voluntarily registering to withhold Connecticut income tax for your Connecticut resident employees who work outside of Connecticut? ..... ☐ Yes ☐ No

Do you intend to withhold Connecticut income tax from pension plans, annuity plans, retirement distributions, or gambling distributions? ..... ☐ Yes ☐ No

Do you pay nonresident athletes or entertainers for services they render in Connecticut? ..... ☐ Yes ☐ No

Do you only have household employees and wish to withhold Connecticut income tax? ..... ☐ Yes ☐ No

Do you only have agricultural employees and wish to withhold Connecticut income tax? ..... ☐ Yes ☐ No

If **Yes**, do you file federal Form 943, Employer's Annual Tax Return for Agricultural Employees, and wish to file **Form CT-941**, *Connecticut Quarterly Reconciliation of Withholding*, annually? .... ☐ Yes ☐ No

If you answered **Yes** to any of the income tax withholding questions, **enter the date** you will start withholding Connecticut income tax. ..... m m d d y y

If you use a payroll service, enter the name of the payroll company: _____

8. Sales and Use Taxes

Do you sell, or will you be selling, goods in Connecticut (either wholesale or retail)? ..... ☐ Yes ☐ No

Do you rent equipment or other tangible personal property to individuals or businesses in Connecticut? ..... ☐ Yes ☐ No

Do you serve meals or beverages in Connecticut? ..... ☐ Yes ☐ No

Do you provide a taxable service in Connecticut? See the Informational Publication, *Getting Started in Business, and the Special Notice on Legislative* Changes Affecting the Sales and Use Taxes, on the DRS website, for a list of taxable services..... ☐ Yes ☐ No

If you answered **Yes** to any of the sales and use taxes questions, **enter the date** you will start selling or leasing goods or taxable services. ..... m m d d y y

8a Prepaid Wireless Service E 9-1-1

Do you sell prepaid wireless service in Connecticut?..... ☐ Yes ☐ No

If you answered **Yes, enter the date** you will start to sell these in Connecticut. ..... m m d d y y

9. Room Occupancy Tax

Do you provide lodging rooms for rent in a hotel, motel, or rooming house in Connecticut for 30 consecutive days or less? ..... ☐ Yes ☐ No

If you answered **Yes, enter the date** you will start to provide rooms for rent for lodging purposes in Connecticut. ..... m m d d y y

10. Business Entity Tax Do not complete this section if the entity is liable for the corporation business tax.

The **business entity tax** applies to all of the following business types formed under Connecticut law and to those non-Connecticut entities required to register with or obtain a certificate of authority from the Connecticut Secretary of the State before transacting business in the state, whether or not the business has registered or filed a certificate of authority, as the case may be, with the Connecticut Secretary of the State.

- S corporations (Qualified subchapter S subsidiaries (QSSS) are not liable for the business entity tax.);
- Limited liability companies (LLCs or SMLLCs) — any limited liability company that is, for federal income tax purposes, either:
- Treated as a partnership if it has two or more members; **or**
- Disregarded as an entity separate from its owner if it has a single member;
- Limited liability partnerships (LLPs); **and**
- Limited partnership (LPs).

Are you a business entity as described above? ☐ Yes ☐ No

Enter state you are organized under: _____ **Enter date of organization.** ..... m m - d d - y y

If not organized in Connecticut, enter the earlier of the date you started business in Connecticut or the date you registered with the Connecticut Secretary of the State. ..... m m - d d - y y

Enter the month your tax year closes: _____

11. Corporation and Unrelated Business Income Taxes

Corporation Business Tax Do not complete this section if the entity is liable for the business entity tax.

Are you a corporation? ..... ☐ Yes ☐ No

Are you an LLC, SMLLC, or other association taxed as a corporation?..... ☐ Yes ☐ No

Is this corporation exempt from federal income tax?..... ☐ Yes ☐ No

Have you received a determination from the Internal Revenue Services (IRS) that this corporation is exempt from federal income tax?..... ☐ Yes ☐ No

If **Yes**, enclose a copy of your IRS letter of determination.

Enter state you are organized under: _____ **Enter date of organization.** ..... m m d d y y

If not a Connecticut corporation, enter the earlier of the date you started business in Connecticut or the date you registered with the Connecticut Secretary of the State. ..... m m d d y y

Enter the month the corporate year closes: _____

Unrelated Business Income Tax

Are you a federally exempt organization that has unrelated business income attributable to a trade or business in Connecticut?..... ☐ Yes ☐ No

If you answered **Yes, enter the date** the unrelated business income tax liability started. ..... m m d d y y

Passive Investment Company (PIC)

Is this corporation a passive investment company as defined in Conn. Gen. Stat.§12-213(a)(27)? ☐ Yes ☐ No

Enter the date the PIC was organized. ..... m m d d y y

Enter Connecticut tax registration number of the PIC's related financial service or insurance company: _____

12. Business Use Tax

If you are registered for or are registering for sales and use taxes, you do not need to complete this section.

Business use tax is due when a business purchases taxable goods or services including the purchase or lease of assets, consumable goods, and promotional items, for use in Connecticut without paying Connecticut sales tax.

Will you be purchasing taxable goods or services for use in Connecticut without paying Connecticut sales tax? ..... ☐ Yes ☐ No

If you answered **Yes** to the business use tax question, **enter the tax liability start date.** ..... m m d d y y

If you answered **No**, you must complete the *Business Use Tax Declaration* section below.

Business Use Tax Declaration: By registering for any of the taxes listed in this application, you have indicated to the Department of Revenue Services (DRS) that you may have a business use tax liability. Therefore, based on your application, you will be automatically registered for the business use tax unless you complete the following declaration.

I, _____(name of taxpayer or authorized representative of taxpayer), acknowledge I have read and understand the information concerning the business use tax and declare I will not be liable for business use tax. Please initial here. _____

13. Registration Fee Schedule

Enter the registration fee amount indicated. If you are liable for either sales and use taxes or room occupancy tax, or both, as indicated in Sections 8 or 9, you must pay a $100 registration fee. Enter the appropriate registration fee(s) from Addendum A if you are registering for the cigarette tax. You must include the total registration fee due with Form REG-1 or your registration application **will not be processed** and will be returned.

Make your check payable to: **Commissioner of Revenue Services**. If you register by mail, send Form REG-1 with your payment to: Department of Revenue Services, PO Box 2937, Hartford CT 06104-2937

			Registration Fee
a.	If registering for **sales and use taxes** or **room occupancy tax**, enter $100.*	a.	
b.	If registering for **cigarette tax**, see Addendum A.	b.	
c.	**Total registration fee due:** Add Line a and Line b.	c.	

* No fee is required for room occupancy tax if you are registered or are registering for sales and use taxes.

14. All Applicants Must Sign the Following Declaration

I declare under penalty of law that I have examined this application and, to the best of my knowledge and belief, it is true, complete, and correct. I understand the penalty for willfully delivering a false application to DRS is a fine of not more than $5,000, or imprisonment for not more than five years, or both.

Sign here and keep a copy for your records.	Signature of owner, partner, LLC member, or corporate officer	Date	Telephone number
	Print name of owner, partner, LLC member, or corporate officer	Title	

Department of Revenue Services
State of Connecticut
PO Box 2937
Hartford CT 06104-2937
(Rev. 11/04)

Instructions for Form REG-1
Business Taxes Registration Application

How to Register

On-line Registration

Save time and register for a Connecticut tax registration number at your convenience when you file **Form REG-1**, *Business Taxes Registration Application*, on-line at the Department of Revenue Services (DRS) Web site at **www.ct.gov/DRS** You will receive your tax registration number in the mail in about **six days**. If you owe a registration fee, you must pay the fee electronically by entering the account number and routing number for your checking or savings account.

If you are registering for a tax type that requires you attach Addendum B to the REG-1 or if you are registering as a cigarette retailer (included on Addendum A), you may register on-line. If you are registering for another tax type that requires you attach Addendum A, C, D, or E to the REG-1, you must register by mail or in person at any DRS office.

Mail in Registration

Complete Form REG-1 and mail it to DRS at:

Department of Revenue Services
PO Box 2937
Hartford CT 06104-2937

If you owe a registration fee, you must include payment by check or money order with the application. You will receive your Connecticut tax registration number in the mail in **5 to 6 weeks**.

Walk-in Registration

You may file Form REG-1 in person at any DRS office. You will be issued a Connecticut tax registration number **immediately**. Bring a photo identification, such as a driver's license, and a check or money order if you owe a registration fee. (Cash is accepted at the Hartford location only.)

DRS offices are located in:

Bridgeport 10 Middle St. 203-336-7890	**Hamden** 3074 Whitney Ave. 203-287-8243	**Hartford** 25 Sigourney St. 860-297-5962
Norwich 2 Cliff St. 860-889-2669	**Waterbury** 55 West Main St., Suite 100 203-805-6789	

The application must be signed by the individual owner, partner, officer of the corporation, member of the limited liability company, or another who has written authorization to sign in the form of a Power of Attorney. If anyone other than the owner brings the signed application to the office and wants to obtain the registration for the owner, he or she must have written authorization from the owner to obtain the registration on his or her behalf.

Purpose of Form REG-1

Use Form REG-1 to obtain a Connecticut tax registration number or to register for additional tax types under your current Connecticut tax registration number.

Use Form REG-1 to register for any of these taxes:

- Business entity tax
- Business use tax
- Corporation business tax *(including PIC)*
- Income tax withholding
- Room occupancy tax
- Sales and use taxes
- Unrelated business income tax

In addition to Form REG-1, you must complete and attach the appropriate addendum as noted to Form REG-1 to register for any of these taxes. The forms are available on the DRS Web site at **www.ct.gov/DRS**

REG-1 Addendum A:
- Cigarette taxes
- Tobacco products tax

REG-1 Addendum B:
- Admissions and dues taxes
- Dry cleaning surcharge
- Motor vehicle rental surcharge
- Tourism surcharge

REG-1 Addendum C:
- Motor fuels tax
- Petroleum products gross earnings tax

REG-1 Addendum D:
- Alcoholic beverages tax

REG-1 Addendum E:
- Community antenna television system companies tax
- Railroad companies tax
- Satellite companies tax
- Solid waste assessment
- Suppliers of natural gas
- Utility companies tax

Registering for Other Tax Types

To register for these taxes, use the form listed:

- Authority to Collect Use Tax **REG-7**
- International Fuel Tax Agreement (IFTA) **CT-IFTA-2**
- Motor Carrier Road Tax **REG-3MC**

For more information on registering with the Department of Revenue Services (DRS), visit DRS Web site at **www.ct.gov/DRS** or call 1-800-382-9463 (in-state) or 860-297-5962 (from out-of-state)

Who Must Register to Complete Form REG-1

Businesses must register with the Connecticut DRS if they:

- Have people working in Connecticut
- Withhold Connecticut income tax
- Operate a business in Connecticut
- Are required to file an annual report with the Connecticut Secretary of the State and are subject to the business entity tax
- Provide taxable services in Connecticut
- Sell, rent, or lease goods in Connecticut (wholesale or retail)
- Furnish space for storage of tangible personal property
- Have a manufacturing facility in Connecticut
- Serve meals or beverages in Connecticut
- Purchase taxable goods or services for use in Connecticut
- Provide lodgings in Connecticut subject to the room occupancy tax
- Carry on a business as a corporation in Connecticut
- Distribute alcoholic beverages in Connecticut
- Distribute motor fuel used to propel motor vehicles on public highways or roads in Connecticut
- Sell petroleum products in Connecticut
- Operate a place of amusement, entertainment, or recreation in Connecticut
- Operate a social, health, athletic, or sporting club in Connecticut
- Sell or distribute cigarettes or tobacco products in Connecticut
- Own, lease, maintain, operate, manage, or control a community antenna television system in Connecticut
- Provide satellite television services to Connecticut
- Operate a railroad in Connecticut on a for-profit basis
- Are a resources recovery facility in Connecticut
- Market natural gas to an end user in Connecticut
- Provide distribution or transmition services for electricity in Connecticut
- Sell electricity as a municipality to customers in Connecticut
- Manufacture, sell, or distribute gas to be used for light, heat, or power in Connecticut
- Operate a dry cleaning establishment in Connecticut

Registration Fees

Sales and use taxes	$ 50
Room occupancy tax*	$ 50
Cigarette dealer's license	$ 25
Cigarette distributor's license	$ 1,000
Cigarette distributor chain operator	
5 to 14 retail locations	$ 250
15 to 24 retail locations	$ 500
25 or more retail locations	$1,000
Cigarette manufacturer/importer	$5,000
Distributor of tobacco products	$100

* No fee is required for room occupancy tax if you are registered or are registering for sales and use taxes.

Electronic Filing Methods for Certain Tax Forms

Once you are registered with DRS, you may file certain tax forms by Internet or telephone using the DRS *Fast-File* program. Look for this logo.

Filing Requirements for Other Taxes

See **Informational Publication 2003(28)**, *Getting Started in Business*, available on the DRS Web site at **www.ct.gov/DRS**

Other Connecticut Licensing Requirements

For information on other Connecticut licensing requirements, visit **www.ct-clic.com**.

How to Get Help

Visit the DRS Web site at **www.ct.gov/DRS** and click on *Businesses*.

Personal assistance is available by telephone or at any DRS office locations, Monday through Friday, during business hours.

CONN-TAX, the DRS telephone information line, is available anytime.

- **1-800-382-9463** (in-state) or
- **860-297-5962** (from anywhere).

TTY, TDD, and Text Telephone users only may transmit inqu anytime by calling 860-297-4911.

Additional forms and publications are available anytime:

- **Internet:** Visit the DRS Web site at **www.ct.gov/DRS**
- **DRS TAX-FAX:** Call **860-297-5698** from the handset attached to your fax machine and select from the menu. Only forms (not publications) are available through TAX-FAX; or
- **Telephone:** Call **1-800-382-9463** (in-state) and select **Option 2** from a touch-tone telephone, or **860-297-4753** (from anywhere).

Application Instructions

Complete the entire application unless the section instructions indicate otherwise. Answering Yes to any question in Sections 7 through 12 means you may have a Connecticut tax liability for that tax. In each section where you answer Yes to any question, you must indicate the date you first incurred a tax liability in Connecticut for that tax type.

Exceptions:

- Taxpayers with a valid Connecticut tax registration number who wish to register for another tax must complete Sections 1 through 6, Section 14, and the section for the specific tax type(s) for which you wish to register. See the section *Purp of Form REG-1* on Page 1 of these instructions to deter if you have to complete an addendum to Form REG-1.
- Household employers who pay wages to and intend to withhold Connecticut income tax for housekeepers, nannies, health aides, caretakers, etc. – complete Sections 1 through 7 and 14 only.

THE FOLLOWING PAGES ARE A SAMPLE COPY OF THE TOWN OF GREENWICH CONTRACT FOR YOUR REVIEW. YOU MUST BE ABLE TO SIGN THIS CONTRACT AND MEET THE NECESSARY INSURANCE AS REQUIRED BY THE TOWN OF GREENWICH IN ORDER FOR YOUR PROPOSAL TO BE CONSIDERED.

AGREEMENT CONTRACT NO.

THIS AGREEMENT, executed this day of in the year Two Thousand Twenty Two (herein referred to as the "AGREEMENT"), by and between the Town of Greenwich, Connecticut, acting through _____ hereunto duly authorized, "OWNER" and _____, acting through _____ (insert name of individual and title) duly authorized, "CONTRACTOR".

WITNESSETH, that the parties to these presents, each in consideration of the under-taking, promises and agreements on the part of the other herein contained, have undertaken, promised and agreed to do hereby undertake, promise and agree, the Owner for itself, its successors and assigns, and the Contractor for himself and his heirs, executors, administrators, successors and assigns, as follows:

1. DEFINITIONS:

Wherever the words hereinafter defined or pronouns used in their stead occur in the Contract Documents, they shall have the following meaning:

The word "Owner" shall mean the Town of Greenwich and shall include its authorized representative.

The word "Contractor" shall mean the person or organization identified as such in this Agreement and shall include his authorized representative.

The words "Contracting Officer or Agency" shall mean that official of the Town which awards the contract, executes the Agreement and is the Owner's authorized representative.

The Information for Bidders, the Contractor's Bid as accepted by the Owner, the Contract Conditions and Specifications and the General, Technical and Materials Specifications, the Drawings, and all addenda and amendments to any of the foregoing, collectively constitute the Contract Documents, and are sometimes herein referred to as the "Contract".

2. DESCRIPTION OF WORK:

3. PAYMENT:

The Contractor shall be paid on a monthly basis after presentation of vouchers, and subject to acceptance and approval by the Town of Greenwich.

Such payments will be made by the Town of Greenwich monthly for all services actually rendered, and the acceptance by the Contractor of any such monthly payment shall be a release to the Town of all claims and all liability to the Contractor in connection with the contract, arising during the period for which payment is made. No payment, however, shall operate to release the Contractor or its sureties or insurers from any obligation under the Contract to be entered into or the Performance Bond or any insurance policies issued in connection with said contract.

4. **PERFORMANCE MAINTENANCE AND PAYMENT BOND:**

The Contractor shall, simultaneously with the signing of the Contract, furnish the Town the executed Performance, Maintenance and Payment Bond of a surety company authorized to do business in the State of Connecticut, and acceptable to the Town, in the sum of the full amount of the Contract obligation in the form provided by the Town.

THE ABOVE IS ONLY REQUIRED FOR CONTRACTS EXCEEDING $100,000.00.

5. **GUARANTEE:**

The Contractor guarantees that the Work and services to be performed, furnished, used or installed in the construction of the same, shall be free from defects and flaws, and shall be performed and furnished in strict accordance with the Drawings, if any, Specifications, and other Contract Documents, that the strength of all parts of all manufactured equipment shall be adequate and as specified and that the performance test requirements of the Contract shall be fulfilled. This guarantee shall be for a period of one year from and after the date of completion and acceptance of the Work as stated in the final estimate. The Contractor shall repair, correct or replace as required, promptly and without charge, all work, equipment and material, or parts thereof, which fail to meet the above guarantee or which in any way fail to comply with or fail to be in strict accordance with the terms and provisions and requirements of the Contract during such one-year period, and also shall repair, correct, or replace all damage to the Work resulting from such failure.

6. **DEFECTIVE WORK:**

The inspection of the Work shall not relieve the Contractor of any of his obligations to perform and complete the Work as required by the Contract. Defective work shall be corrected and unsuitable materials, equipment apparatus and other items shall be replaced by the Contractor, notwithstanding that such work, materials, equipment, apparatus and other items may have been previously overlooked or accepted or estimated for payment. If the work or any part thereof shall be found defective at any time before the final acceptance of the work, the Contractor shall forthwith make good such defect in a manner satisfactory to the Town; if any material, equipment, apparatus or other items brought upon the site for use or incorporation in the work, or selected for the same, is condemned by the Town as unsuitable or not in conformity with the Specifications or any of the other Contract Documents, the Contractor shall forthwith remove such materials, equipment, apparatus and other items from the site of the Work and shall at his own cost and expense make good and replace the same and any material furnished by the Town which shall be damaged or rendered defective by the handling or improper installation by the Contractor, his agents, servants, employees or subcontractors.

7. **COMPLIANCE WITH LAWS:**

The Contractor shall keep himself fully informed of all existing and future federal, state and local laws, ordinances, rules and regulations affecting those engaged or employed on the work, the materials and equipment used in the work or the conduct of the work, and of all orders, decrees and other requirements of bodies or tribunals having any jurisdiction or authority over the same. If any discrepancy or inconsistency is discovered in the Drawings, if any, Specifications or other Contract Documents in relation to any such law, ordinance, rule, regulation, order, decree or other requirement, the Contractor shall forthwith report the same to the Town in writing. The Contractor shall at all times observe and comply with, and cause all his agents, servants, employees and subcontractors to observe and comply with all such existing and future laws, ordinances, rules, regulations, orders, decrees and other requirements, and he shall protect, indemnify and save harmless the Town, its officers, agents, servants and employees from and against any and all claims, demands, suits proceedings, liabilities, judgments, penalties, losses, damages costs and expenses, including attorneys' fees, arising from or based upon any violation or claimed violation of any such law, ordinance, rule, regulation, order, decree or other requirement, whether committed by the Contractor or any of his agents, servants, employees or subcontractors.

8. **INDEMNITY:**

The Contractor shall indemnify and save harmless the Town and its officers, agents, servants and employees, from and against any and all claims, demands, suits, proceedings, liabilities, judgments, awards, losses, damages, costs and expenses, including attorneys' fees, on account of bodily injury, sickness, disease or death sustained by any person or persons or injury or damage to or destruction of any property, directly or indirectly arising out of, relating to or in connection with the Work, whether or not due or claimed to be due in whole or in part to the active, passive or concurrent negligence or fault of the Contractor, his officers, agents, servants or employees, any of his subcontractors, the Town any of his respective officers, agents, servants or employees and/or any other person or persons, and whether or not such claims, demands, suits or proceedings are just, unjust, groundless, false or fraudulent; and the Contractor shall and does hereby assume and agrees to pay for the defense of all such claims, demands, suits and proceedings; and provided that the Contractor shall not be required to indemnify the Town, its officers, agents, servants or employees against any such damages occasioned solely by acts or omissions of the Town other than supervisory acts or omissions of the Town in connection with the Work.

9. **INDEMNITY AGAINST SUBCONTRACTORS' CLAIMS:**

If any other contractor or any subcontractor of any such other contractor shall suffer or claim to have suffered loss, damage or delay by reason of the acts or omissions of the Contractor or of any of his subcontractors, the Contractor agrees to assume the defense against any such claim and to reimburse such other contractor or subcontractor for such loss or damage. The Contractor agrees to and does hereby indemnify and save harmless the Town from and against any and all claims by such other contractors or subcontractors, alleging such loss, damage or delay and from and against any and all claims, demands, suits, proceedings, liabilities, judgments, awards, losses, damages, costs and expenses including attorneys' fees, arising out of, relating to or resulting from such claims.

10. **PATENTS:**

The Contractor shall indemnify and save harmless the Town and all persons acting for or on behalf of the Town from all claims and liability of any nature or kind, and all damages, costs and expenses, including attorneys' fees, arising from or occasioned by an infringement or alleged infringement of any patents or patent rights on any invention, process, materials, equipment, article, or apparatus, or any part hereof, furnished and installed by the Contractor, or arising from or occasioned by the use or manufacture thereof, including their use by the Town.

11. **CHANGES:**

The Town, through its designated Agent, may make changes in the Work and in the Drawings, if any, and Specifications therefor by making alterations therein, additions, thereto or omissions therefrom. All work resulting from such changes shall be performed and furnished under and pursuant to the terms and conditions of the Contract. If such changes result in an increase or decrease in the Work to be done hereunder, or increase or decrease the quantities thereof, adjustment in compensation shall be made therefor. For eliminated or decreased work the Contractor shall allow the Town a reasonable credit as determined by the Parties. Except in an emergency endangering life or property, no change shall be made unless in pursuance of a written order from the Town authorizing the change, and no claim for additional compensation shall be valid unless the change is so ordered.

The Contractor agrees that he shall neither have nor assert any claim for or be entitled to any additional compensation for damages or for loss of anticipated profits on work that is eliminated.

12. **CLAIMS FOR DAMAGES:**

If the Contractor makes claim for any damages alleged to have been sustained by breach of contract or otherwise, he shall, within ten (10) days after occurrence of the alleged breach or within ten (10) days after such damages are alleged to have been sustained whichever date is the earlier, file with the Contracting Officer a written, itemized statement of the details of the alleged breach and the details and amount of the alleged damages. The Contractor agrees that unless such statement is made and filed as so required, his claim for damages shall be deemed waived, invalid and unenforceable, and that he shall not be entitled to any compensation for any such alleged damages. Within ten (10) days after the timely filing of such statement, the Contracting Officer shall file with the appropriate department of the Town, one copy of the statement, and shall file with the Town and the Contractor his determination thereon. The Contractor shall not be entitled to claim any additional compensation for damages by reason of any direction, instruction, determination or decision of the Town or its agents, nor shall any such claims be considered, unless the Contractor shall have complied in all respects with the provisions of this paragraph.

13. **ABANDONMENT OF THE WORK OR OTHER DEFAULT:**

If the Work shall be abandoned, or any part thereof shall be sublet without previous written consent of the Town, or the Contract or any moneys payable hereunder shall be assigned otherwise than as herein specified, or if at any time the Contracting Officer shall be of the opinion, and shall so certify in writing, that the conditions herein specified as to rate of progress are not being complied with, or that the Work or any part thereof is being unnecessarily or unreasonably delayed, or that the Contractor has violated or is in default under any of the provisions of the Contract, or if the Contractor becomes bankrupt or insolvent or goes or is put into liquidation or dissolution, either voluntarily or involuntarily, or petitions for an arrangement or reorganization under the Bankruptcy Act, or makes a general assignment for the benefit of creditors or otherwise acknowledges insolvency, the happening of any of which shall be and constitute a default under the Contract, the Town may notify the Contractor in writing, with a copy of such notice mailed to the surety, to discontinue all Work or any part thereof; thereupon the Contractor shall discontinue such Work or such part thereof as the Town may designate; and the Town may, upon giving such notice, by Contract or otherwise as it may determine, complete the Work or such part thereof and charge the entire cost and expense of so completing the work. The Town shall be entitled to reimbursement from the Contractor and the Contractor agrees to pay to the Town any losses, damages, costs and expenses, including attorneys' fees, sustained or incurred by the Town by reason of any of the foregoing causes. For the purpose of such completion the Town may for itself or for any Contractors employed by the Town take possession of and use or cause to be used any and all materials, equipment,

plant, machinery, appliances, tools, supplies and such other items of every description that may be found or located at the site of the Work.

All costs, expenses, losses, damages, attorneys' fees, and any and all other charges incurred by the Town under this subsection shall be charged against the Contractor and deducted and/or paid by the Town out of any moneys due and payable or to become due or payable under the Contract to the Contractor; in computing the amounts chargeable to the Contractor, the Town shall not be held to a basis of the lowest prices for which the completion of the Work or any part thereof might have been accomplished, but all sums actually paid or obligated therefor to effect its prompt completion shall be charged to and against the account of the Contractor. In case the costs, expenses, losses, damages, attorneys' fees and other charges together with all payments theretofore made to or for the account of the Contractor are less than the sum which would have been payable under the Contract if the Work had been properly performed and completed by the Contractor, the Contractor shall be entitled to receive the difference, and, and in case such costs, expenses, losses, damages, attorneys' fees and other charges, together with all payments theretofore made to or for the account of the Contractor, shall exceed the said sum, the Contractor shall pay the amount of the excess to the Town.

14. **LIENS:**

If at any time any notices of lien or other legal process are filed for labor performed or materials or equipment manufactured, furnished, or delivered to or for the Work, the Contractor shall, at its own cost and expense, promptly discharge, remove or otherwise dispose of the same, and until such discharge, removal or disposition, the Town shall have the right to retain from any moneys payable hereunder an amount which, in its sole judgment, it deems necessary to satisfy such liens and pay the costs and expenses, including attorneys' fees, of defending any actions brought to enforce the same, or incurred in connection therewith or by reason thereof.

15. **CLAIMS:**

If at any time there be any evidence of any claims for which the Contractor is or may be liable or responsible hereunder, the Contractor shall promptly settle or otherwise dispose of the same, and until such claims are settled or disposed of, the Town may retain from any moneys which would otherwise be payable hereunder so much thereof as, in its sole judgment, it may deem necessary to settle or otherwise dispose of such claims and to pay the costs and expenses, including attorneys' fees, of defending any actions brought to enforce such claims or incurred in connection therewith or by reason thereof.

16. **LIABILITY OF TOWN:**

No person, firm or corporation, other than the Contractor, who signed this Contract as such, shall have any interest herein or rights hereunder. No claim shall be made or be valid either against the Town or any agent of the Town and neither the Town nor any agent of the Town shall be liable for or be held to pay any money, except as herein provided. The acceptance by the Contractor of the payment as fixed in the final estimate shall operate as and shall be a full and complete release of the Town and of every agent of the Town of and from any and all claims, demands, damages and liabilities of, by or to the Contractor for anything done or furnished for or arising out of or relating to or by reason of the Work or for or on account of any act or neglect of the Town or of any agent of the Town or of any other person, arising out of, relating to or by reason of the Work, except the claim against the Town for the unpaid balance, if any there be, of the amounts retained as herein provided.

17. **PROVISIONS REQUIRED BY LAW DEEMED INSERTED:**

Each and every provision of law and clause required by law to be inserted in the Contract shall be deemed to be inserted herein, and the Contract shall be read and enforced as though they were included herein. If through mistake or otherwise any such provision is not inserted, or is not correctly inserted, then upon the application of either party, the Contract shall forthwith be physically amended to make such insertion.

18. **PERMITS:**

The Contractor shall, at his own expense, take out and maintain all necessary permits from the State, Town, or other public authorities; shall give all notices required by law; and shall post all bonds and pay all fees and charges incident to the due and lawful prosecution of the Work.

19. **NOT TO SUBLET OR ASSIGN:**

The Contractor shall constantly give his personal attention to the faithful prosecution of the Work, shall keep the same under his personal control, shall not assign the Contract or sublet the Work or any part thereof without the previous written consent of the Town, and shall not assign any of the moneys payable under the Contract, or his claim thereto, unless by and with the like written consent of the Town and the surety on the Contract Bonds. Any assignment or subletting in violation hereof shall be void and unenforceable.

20. **EMPLOY COMPETENT PEOPLE:**

The Contractor shall employ only competent people on the Work and shall not employ people or means which may cause strikes, work stoppages and/or disturbances by workmen employed by the Contractor, any subcontractor, the Town, the Contracting Officer or any other contractor. Whenever the Contracting Officer notifies the Contractor in writing that in his opinion any person on the Work is incompetent, unfaithful, disorderly, or otherwise unsatisfactory or not employed in accordance with the provisions of the Contract, such person shall be discharged from the Work and shall not again be employed on it, except with the written consent of the Contracting Officer.

21. **EMPLOY SUFFICIENT LABOR AND EQUIPMENT:**

If in the sole judgment of the Contracting Officer the Contractor is not employing sufficient labor, plant, equipment or other means to complete the Work within the time specified, the Contracting Officer may, after giving written notice, require the Contractor to employ such additional labor, plant, equipment and other means as the Contracting Officer deems necessary to enable the Work to progress properly.

22. **INTOXICATING LIQUORS:**

The Contractor shall not sell and shall neither permit nor suffer the introduction or use of intoxicating liquors upon or about the Work.

23. **ACCESS TO WORK:**

The Town, the Contracting Officer, and their officers, agents, servants and employees may at any and all times and for any and all purposes, enter upon the Work and the site thereof and the premises used by the Contractor, and the Contractor shall at all times provide safe and proper facilities therefor.

24. **EXAMINATION OF WORK:**

The Contracting Officer shall be furnished by the Contractor with every reason able facility for examining and inspecting the Work and for ascertaining that the Work is being performed in accordance with the requirements and intent of the Contract, even to the extent of requiring the uncovering or taking down portions of finished work by the Contractor.

25. **EXTRA WORK:**

The Contractor shall perform any extra work (work in connection with the Contract but not provided for herein) when and as ordered in writing by the Contracting Officer, at the unit prices stipulated in the Contract for such work or, if none are so stipulated, either (a) at the price agreed upon before such work is commenced and named in the written order for such work, or (b) if the Contracting Officer so elects, for the reasonable cost of such work, as determined by the Contractor and approved by the Contracting Officer, plus a percentage of such cost, as may be agreed upon by Contract and Contracting Officer.

26. **CHANGES NOT TO AFFECT BONDS:**

It is distinctly agreed and understood that any changes made in the work or the Drawings or Specifications therefor (whether such changes increase or decrease the amount thereof or the time required for its performance) or any changes in the manner or time of payments made by the Town to the Contractor, or any other modifications of the Contract, shall in no way annul, release, diminish or affect the liability of the surety on the Contract Bonds given by the Contractor, it being the intent hereof that notwithstanding such changes the liability of the surety on said bonds continue and remain in full force and effect.

27. **PRICES FOR WORK:**

The Town shall pay and the Contractor shall receive the prices stipulated in the Bid made a part hereof as full compensation for everything performed and furnished and for all risks and obligations undertaken by the Contractor under and as required by the Contract.

28. **MONEYS MAY BE RETAINED:**

The Town may at any time retain from any moneys which would otherwise be payable hereunder so much thereof as the Town may deem necessary to complete the Work hereunder and to reimburse it for all costs, expenses, losses, damage and damages chargeable to the Contractor hereunder.

29. **USE OR PARTIAL PAYMENT NOT ACCEPTANCE:**

It is agreed that this is an entire contract for one whole and complete Work or result and that neither the Town's entrance upon or use of the Work or any part thereof nor any partial payments by the Town shall constitute an acceptance of the Work or any part thereof before its entire completion and final acceptance.

30. **NON-CONNECTICUT CONTRACTORS:**

Pursuant to Connecticut General Statutes §12-430(7), as amended by Connecticut Public Act #11-61, Section 66, a nonresident contractor shall comply with the State of Connecticut's bonding requirements.

31. **PAYMENT TO SUBCONTRACTORS:**

As required by Section 49-41a of the Connecticut General Statutes, within thirty days after payment to the Contractor by the Town for work under this Contract, he shall pay any amounts due any subcontractor, whether for labor performed or materials furnished when such labor or materials has been included in a requisition submitted by such Contractor and paid by the Town.

32. **INSURANCE:**

Insurance coverage required as noted in "Exhibit A" attached.

33. **PREVAILING WAGE RATES; CONSTRUCTION SAFETY AND HEALTH COURSE:**

Except as noted below, the Contractor shall comply with the current provisions of Section 31-53 of the General Statutes of the State of Connecticut, a part of which is quoted as follows:

"The wages paid on an hourly basis to any person performing the work of any mechanic, laborer or worker on the work herein contracted to be done and the amount of payment or contribution paid or payable on behalf of each such person to any employee or welfare fund, as defined in subsection (h) of section 31-53 of the General Statutes, shall be at a rate equal to the rate customary or prevailing for the same work in the same trade or occupation in the town in which such public works project is being constructed. Any contractor who is not obligated by agreement to make payment or contribution on behalf of such persons to any such employee welfare fund shall pay to each mechanic, laborer or worker as part of such person's wages the amount of payment or contribution for such person's classification on each pay day."

All Contractors and subcontractors shall submit certified weekly payrolls, on forms furnished by the Town, for all contracts meeting the aforementioned monetary limits. The certified payrolls shall be submitted with the Contractor's monthly certificate for payment.

Section 31-55a of the General Statutes of the State of Connecticut provides that the prevailing wage rates applicable to any awarded contract or subcontract are subject to annual adjustments each July 1st for the duration of the project.

Each Contractor that is awarded a contract shall pay the annual adjusted prevailing wage rate that is in effect each July 1st, as posted by the Department of Labor.

It is the Contractor's responsibility to obtain the annual adjusted prevailing wage rate increases directly from the Department of Labor's web site. The annual adjustments will be posted on the Department's of Labor web page: www.ctdol.state.ct.us. For those without Internet access, contact the division listed below.

The Contractor shall also furnish proof with the weekly certified payroll for the first week each employee begins work that any person performing the work of a mechanic, laborer or worker has completed a course of at least ten (10) hours in duration in construction safety and health approved by the federal Occupational Safety and Health Administration in accordance with Connecticut General Statutes Section 31-53b and regulations adopted by the State of Connecticut Labor Commissioner.

The provisions of this section (32) shall not apply where the total cost of all work to be performed by all Contractors and subcontractors in connection with new construction of any public works project is less than four hundred thousand dollars ($400,000) or where the total cost of all work to be performed by all contractors and subcontractors in connection with any remodeling, refinishing, refurbishing, rehabilitation, alteration or repair of any public works project is less than one hundred thousand dollars ($100,000).

Questions can be directed to the Contract Compliance Unit, Wage and Workplace Standards Division, Connecticut Department of Labor, 200 Folly Brook Blvd., Wethersfield, CT 06109 at 860-263-6790.

34. **GOVERNING LAW:**

The laws of the State of Connecticut shall govern this Contract and any and all litigation related to this Contract. In the event of litigation related to this Contract, the exclusive forum shall be the State of Connecticut and the exclusive venue for such litigation shall be the Judicial District for Stamford/Norwalk at Stamford.

IN WITNESS, WHEREOF, the parties of the AGREEMENT have hereunto set their hand and seals the day first above written.

TOWN OF GREENWICH, CONNECTICUT

BY_____

THE CONTRACTOR

BY_____

DISHWASHER UPGRADE AT NEW LEBANON SCHOOL

ISSUE: FOR CONSTRUCTION DATE: DECEMBER 2, 2022

BID # 2398-22

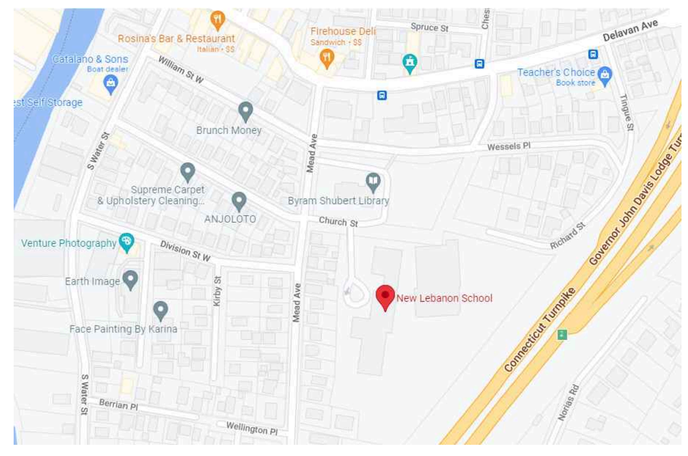

DOCUMENTS PREPARED BY:

LFG
LANDMARK FACILITIES GROUP, INC.
252 East Avenue
Norwalk, CT 06855
(203) 866-4626 Tel
(203) 866-8019 Fax

DRAWING INDEX

T-001	COVER SHEET
P-001	PLUMBING NOTES AND DETAILS
P-100	PLUMBING PLAN
P-200	PLUMBING SPECIFICATIONS
E-001	ELECTRICAL NOTES AND SCHEDULES
E-100	ELECTRICAL PLAN
E-200	ELECTRICAL SPECIFICATIONS

LFG
LANDMARK FACILITIES GROUP, INC.
252 East Avenue
Norwalk, CT 06855
(203) 866-4626 Tel
(203) 866-8019 Fax

REV	DATE	DESCRIPTION
	12-2-22	ISSUE FOR CONSTRUCTION

DISHWASHER UPGRADE

NEW LEBANON SCHOOL
25 MEAD AVENUE
GREENWICH, CT 06830

SCALE: AS NOTED	APPROVED BY: LFG	DRAWN BY: LFG
DATE: 17 Nov 2022		CHECKED BY: LFG

PROJECT COVER SHEET

BID NUMBER:	LFG JOB NUMBER:	DRAWING NUMBER:
2396-22	1018.***.***	T-001

GENERAL NOTES

1. DRAWINGS ARE DIAGRAMMATIC AND INDICATE THE GENERAL ARRANGEMENT OF SYSTEMS AND WORK. CONTRACTOR SHALL FURNISH ALL NECESSARY OUTLETS, SUPPORTS, FITTINGS AND ACCESSORIES TO FULFILL APPLICABLE CODES, REGULATIONS, BUILDING STANDARDS AND THE BEST PRACTICES OF THE TRADE FOR FIRST CLASS ELECTRICAL INSTALLATION.
2. THE DRAWINGS INDICATE SIZE AND GENERAL LOCATION OF WORK. SCALED DIMENSIONS SHALL NOT BE USED. THE EXACT LOCATION AND ELEVATION OF ALL ELECTRICAL EQUIPMENT SHALL BE COORDINATED IN FIELD WITH RESPECTIVE CONTRACTOR/OWNER.
3. FEEDERS AND BRANCH CIRCUITRY SHALL BE RUN IN CONDUIT MINIMUM 3/4" CONDUIT UNLESS OTHERWISE NOTED. FINAL CONNECTIONS TO MOTORS MAY BE DONE WITH FLEXIBLE METALLIC CONDUIT (NO LONGER THAN 18"). IN UNFINISHED AREA CONDUIT SHALL BE RUN EXPOSED AND IN FINISHED AREAS CONDUIT SHALL BE RUN CONCEALED.
4. PROVIDE PANEL NAME PLATE MADE OF BLACK LAMINATED PLASTIC WITH WHITE ENGRAVED LETTERING AND TYPE WRITTEN DIRECTORY FOR ALL NEW PANELBOARDS.
5. ALL CONDUCTORS SHALL BE COPPER, TYPE THHN/THWN INSULATED. ALL CONDUCTORS SHALL HAVE 600 VOLT RATED INSULATION UNLESS OTHERWISE NOTED.
6. EXACT LOCATION AND MOUNTING HEIGHTS OF ALL WIRING DEVICES SHALL BE COORDINATED WITH THE ARCHITECT PRIOR TO THE INSTALLATION.
7. WALL MOUNTED EQUIPMENT (SWITCHES, RECEPTACLES, ETC.,) SHALL BE SURFACE MOUNTED IN UNFINISHED AREAS AND FLUSH MOUNTED IN FURNISHED AREAS.
8. CONDUIT RUNS SHALL BE PARALLEL WITH OR AT RIGHT ANGLES TO WALLS AND CEILINGS. CONDUIT SHALL BE SUPPORTED BY APPROVED MEANS. SUPPORTS FOR HORIZONTAL RUNS OF CONDUIT SHALL NOT EXCEED SEVEN FEET ON CENTERS.
9. PROVIDE PULL BOXES, JUNCTION BOXES, CONDUIT ELBOWS AND OFFSETS TO SUIT FIELD CONDITIONS AND THE NATIONAL ELECTRICAL CODE.
10. ALL EMPTY CONDUIT SHALL BE PROVIDED WITH A DRAGWIRE.
11. THE MINIMUM WIRE SIZE FOR 120 VOLT BRANCH CIRCUITS SHALL BE NO. 12 AWG, EXCEPT OVER 100' IN LENGTH SHALL BE NO. 10 AWG.
12. PROVIDE ALL REQUIRED AND NECESSARY ACCESSORIES (EX. CONNECTORS, ADAPTERS, BUSHINGS, CLAMPS, ETC.) TO FACILITATE COMPLETE INSTALLATION.
13. COORDINATE LOCATION OF ALL PLUMBING EQUIPMENT WITH PLUMBING CONTRACTOR IN FIELD.
14. ALL JUNCTION OR OUTLET BOXES SHALL BE INSTALLED SO AS TO ALLOW ACCESS TO COVER. PROVIDE ARCHITECT APPROVED ACCESS DOORS OR PLATES AS REQUIRED IN AREAS WHERE UNOBSTRUCTED ACCESS TO BOX OR OUTLET IS NOT POSSIBLE.
15. PRIOR TO ORDERING LIGHTING FIXTURES, COORDINATE WITH ARCHITECTURAL DRAWINGS AND SPECIFICATIONS. IF DISCREPANCIES EXIST BETWEEN ARCHITECTURAL AND ENGINEERING INFORMATION OBTAIN CLARIFICATION PRIOR TO PROCEEDING.
16. PREPARE 'AS-BUILT' TRACINGS SHOWING ALL CHANGES IN WIRE SIZE, CIRCUIT NUMBERING, CIRCUIT ROUTING, EQUIPMENT LOCATIONS AND ALL ELECTRICAL WORK AS ACTUALLY INSTALLED.
17. ALL WORK SHALL CONFORM BUILDING STANDARDS, AND WHERE REQUIRED SHALL BE SUBMITTED TO APPROPRIATE AGENCIES AND PUBLIC JURISDICTIONS FOR INSPECTION AND APPROVAL.
18. PROOF OF INSPECTION, AND APPROVAL OF SHOP DRAWINGS, OPERATING AND MAINTENANCE MANUALS, VALVE SCHEDULES, AND ALL OTHER PERTINENT INFORMATION SHALL BE FILED WITH THE BUILDING OWNER PRIOR TO ACCEPTANCE OF WORK.
19. THE LOCATION OF PIPING, DUCTS, CONDUITS, OR OTHER EQUIPMENT OUTSIDE OF THIS FLOOR SHALL BE REVIEWED TO LIMIT WORK AND MINIMIZE THE DISTURBANCE TO OTHER TENANTS.
20. BUILDING OWNER APPROVAL SHALL BE OBTAINED PRIOR TO UTILITIES SHUT DOWN.
21. DEPARTMENT OF BUILDINGS APPROVAL SHALL BE OBTAINED, AND ISSUED PERMITS ON SITE PRIOR TO COMMENCEMENT OF ANY WORK.
22. IT IS THE INTENT THAT THE FOREGOING WORK SHALL BE COMPLETE IN EVERY RESPECT AND THAT ANY MATERIAL OR WORK NOT SPECIFICALLY MENTIONED OR SHOWN ON THE DRAWINGS, BUT NECESSARY TO FULLY COMPLETE THE WORK SHALL BE PROVIDED.
23. ALL EXPOSED CONDUIT TO BE LOCATED IN FIELD WITH OWNER PRIOR TO INSTALLATION.
24. ALL EXPOSED CONDUIT TO BE PAINTED. VERIFY COLOR WITH OWNER.
25. ALL ELECTRICAL ROUGH-IN: EQUIPMENT LAYOUT TO BE VERIFIED IN FIELD WITH OWNER PRIOR TO INSTALLATION.

ELECTRICAL LEGEND

	SPECIALTY SIMPLEX ELECTRICAL OUTLET. NUMBER INDICATES CIRCUIT NUMBER. 15A, 208V, NEMA 6-15R. 20A, 208V, NEMA 6-20R OR 30A, 208V, NEMA 6-30R.
	DUPLEX ELECTRICAL OUTLET. NUMBER INDICATES CIRCUIT NUMBER.
GFI	DUPLEX ELECTRICAL OUTLET. NUMBER INDICATES CIRCUIT NUMBER AND "GFI" INDICATES GROUND FAULT INTERRUPT.
	QUAD ELECTRICAL OUTLET. NUMBER INDICATES CIRCUIT NUMBER AND "GFI" INDICATES GROUND FAULT INTERRUPT.
J	WALL/CEILING JUNCTION BOX WITH 3/4" (U.O.N.) DIA. CONDUIT STUB-UP 6" ABOVE FINISHED CEILING.
	EXISTING PANEL TO REMAIN
30A	HEAVY DUTY TYPE NON-FUSED DISCONNECT SWITCH WITH FINAL FLEXIBLE EQUIPMENT CONNECTION. 30A INDICATES AMPERE RATING 'WP' WHERE USED INDICATES WEATHERPROOF ENCLOSURE (NEMA 3R).
GFI	GROUND FAULT INTERRUPTER
WP	WEATHERPROOF
ME-#	HOME RUN TO DESIGNATED PANEL AND CIRCUIT #
EPO	MANUALLY OPERATED REMOTE SHUTDOWN SWITCH TO REMAIN
	SUSPENDED OR WALL MOUNTED LED LIGHT FIXTURE, 120V. REFER TO ARCHITECTURAL DRAWINGS FOR ADDITIONAL INFORMATION AND SPECIFICATIONS.
	EXISTING WALL MOUNTED LIGHTING SWITCH TO REMAIN
	EXISTING WALL OR CEILING MOUNTED EXIT SIGN TO REMAIN
	EXISTING WALL MOUNTED EMERGENCY LIGHTING FIXTURE TO REMAIN
	CEILING MOUNTED DUAL TECHNOLOGY (COMBINE PASSIVE INFRARED AND ULTRASONIC) OCCUPANCY SENSOR. WATTSTOPPER DT-300-BZ150.
	EXISTING FIRE ALARM HORN STROBE TO REMAIN

EXISTING PANEL SCHEDULE "KP-1"

PANEL "KP-1" | BUS 225 AMP MAIN LUG ONLY | VOLTAGE 120/208V, 3PH, 4 WIRE
LOAD – | POLES 72
MOUNTING RECESSED | SPEC | AIC SYMM 10,000

DESCRIPTION	WIRE	GRD.	COND.	TRIP	CKT.	KVA A PHASE	KVA B PHASE	KVA C PHASE	CKT.	TRIP	COND.	GRD.	WIRE	DESCRIPTION
EXISTING				20A	1				2	20A				EXISTING
EXISTING				20A	3				4	20A				EXISTING
EXISTING				20A	5				6					
EXISTING				20A	7				8	20A				EXISTING
EXISTING				20A	9				10	20A				EXISTING
EXISTING				20A	11				12	20A				EXISTING
EXISTING				20A	13				14	20A				EXISTING
EXISTING				20A	15				16	20A				EXISTING
EXISTING				50A	17				18	20A				EXISTING
					19				20	50A				EXISTING
EXISTING				30A	21				22	20A				EXISTING
EXISTING				20A	23				24	20A				EXISTING
EXISTING				20A	25				26	20A				EXISTING
EXISTING				40A	27				28	40A				EXISTING
					29				30					
					31				32	20A				EXISTING
EXISTING				20A	33				34	20A				EXISTING
EXISTING				20A	35				36	20A				EXISTING
					37				38	20A				EXISTING
					39				40	20A				EXISTING
EXISTING				20A	41				42	20A				EXISTING
EXISTING				20A	43				44	20A				EXISTING
					45				46					
EXISTING				20A	47				48	20A				EXISTING
EXISTING				20A	49				50					
					51				52	20A				EXISTING
SPARE				20A	53				54	20A				SPARE
SPARE				20A	55				56	20A				SPARE
SPARE				20A	57				58	20A				SPARE
SPARE				20A	59				60	20A				SPARE
SPARE				20A	61				62	20A				SPARE
SPARE				20A	63				64	20A				SPARE
SPARE				20A	65				66					
SPARE				20A	67	6605			68	70A	1 1/4"	8	4	DISHWASHER 2
SPARE				30A	69		6605		70					
					71			6605	72					
	SUBTOTAL					6605	6605	6605						
	TOTAL DESIGN LOAD					19815 va		55.0 amps						
	TOTAL CONNECTED LOAD					19815 va		55.0 amps						

$\left(\frac{XXX\ KVA}{208V * \sqrt{3}}\right)$ = AMPERES

1. PROVIDE HACR TYPE CIRCUIT BREAKERS
2. PROVIDE LOCKING CLIPS
3. VERIFY POWER REQUIREMENTS FOR ACTUAL EQUIPMENT BEFORE INSTALLATION
4. PROVIDE GFI CIRCUIT BREAKER

LFG
LANDMARK FACILITIES GROUP, INC.
252 East Avenue
Norwalk, CT 06855
(203) 866-4626 Tel
(203) 866-8019 Fax

REV	DATE	DESCRIPTION
	12-2-22	ISSUE FOR CONSTRUCTION

DISHWASHER UPGRADE

NEW LEBANON SCHOOL
25 MEAD AVENUE
GREENWICH, CT 06830

SCALE: AS NOTED	APPROVED BY: LJG	DRAWN BY: LJG
DATE: 17 Nov 2022		CHECKED BY: LJG

ELECTRICAL NOTES AND SCHEDULES

BID NUMBER: 2396-22	LFG JOB NUMBER: 1018.***.***	DRAWING NUMBER: E-001

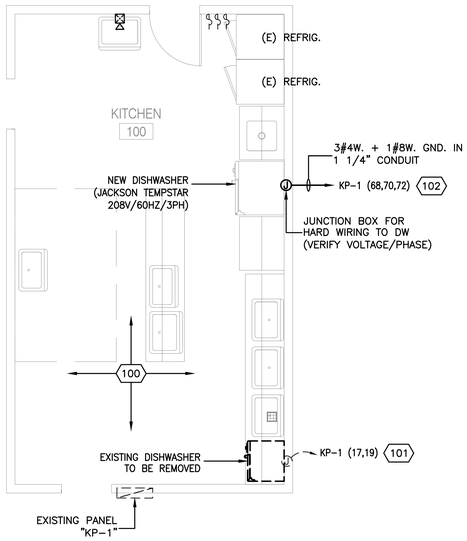

1 FIRST FLOOR ELECTRICAL PLAN
SCALE: 1/4" = 1'-0"

GENERAL NOTES

1. THE DRAWINGS ARE DIAGRAMMATIC IN NATURE AND ARE NOT INTENDED TO SHOW EVERY FITTING (i.e. PULL BOX), ETC. THE CONTRACTOR SHALL COORDINATE WITH ALL TRADES PRIOR TO INSTALLATION OF ANY MATERIAL OR EQUIPMENT.
2. ELECTRICAL CONTRACTOR SHALL COORDINATE WITH THE KITCHEN EQUIPMENT VENDOR FOR EQUIPMENT MOUNTING REQUIREMENTS.
3. ELECTRICAL CONTRACTOR SHALL MAKE FINAL CONNECTIONS TO ALL EQUIPMENT. CONTRACTOR SHALL PROVIDE CORD/PLUG WHERE EQUIPMENT NOT PROVIDED BY VENDOR.
4. ELECTRICAL CONTRACTOR SHALL FIELD VERIFY ALL EQUIPMENT ELECTRICAL REQUIREMENTS WITH EXACT EQUIPMENT PROVIDED AND COORDINATE WITH EQUIPMENT SPECIFICATIONS PRIOR TO INSTALLATION. NOTIFY ENGINEER IF ELECTRICAL DEVICES AND FEEDER SIZES REQUIRE ADJUSTING TO SUIT ANY DISCREPANCIES.
5. CONTRACTOR SHALL RESTORE ALL DISTURBED SURFACES TO MATCH EXISTING ADJACENT FINISHES.

POWER CODED NOTES

100 SCOPE OF WORK IN KITCHEN TO INCLUDE REMOVAL OF EXISTING DISHWASHER AND ASSOCIATED ELECTRICAL DEVICES TO BE REPLACED WITH NEW DISHWASHER IN LOCATION AS SHOWN. NO OTHER WORK REQUIRED IN KITCHEN.

101 REMOVE AND PROPERLY DISPOSE OF EXISTING ELECTRICAL DEVICES SERVING REMOVED EQUIPMENT. REMOVE ALL CONDUIT AND CONDUCTORS BACK TO EXISTING PANEL AND MARK EXISTING CIRCUIT BREAKER AS SPARE.

102 CONNECT TO DESIGNATED EXISTING PANEL AS INDICATED WITH A NEW DEDICATED 3P-70A CIRCUIT BREAKER. REMOVE EXISTING SPARE CIRCUIT BREAKERS IN LOCATION SHOWN. PROVIDE 3#4 + 1#8G WIRING IN 1-1/4"C FROM NEW EQUIPMENT TO EXISTING PANEL. COORDINATE LOCATION WITH G.C. PRIOR TO ROUGH-IN.

LFG
LANDMARK FACILITIES GROUP, INC.
252 East Avenue
Norwalk, CT 06855
(203) 866-4626 Tel
(203) 866-8019 Fax

REV	DATE	DESCRIPTION
	12-2-22	ISSUE FOR CONSTRUCTION

DISHWASHER UPGRADE

NEW LEBANON SCHOOL
25 MEAD AVENUE
GREENWICH, CT 06830

SCALE: AS NOTED	APPROVED BY: LJG	DRAWN BY: LJG
DATE: 17 Nov 2022		CHECKED BY: LJG

ELECTRICAL PLAN

BID NUMBER:	LFG JOB NUMBER:	DRAWING NUMBER:
2396-22	1018.***.***	E-100

ELECTRICAL SPECIFICATIONS

NOTES:

GENERAL: SHOULD ANY REQUIREMENTS IN THESE NOTES, THE SPECIFICATIONS OR THE DRAWINGS CONFLICT, THE MOST RIGOROUS REQUIREMENT SHALL PREVAIL

THE WORK OF THIS DIVISION SHALL INCLUDE ALL LABOR, MATERIALS AND APPARATUS NECESSARY FOR THE COMPLETION OF ALL ELECTRICAL WORK AS SHOWN ON THE DRAWINGS AND AS HEREINAFTER SPECIFIED, LEFT READY FOR SATISFACTORY OPERATION.

ANY APPLIANCE, MATERIALS OR LABOR THAT ARE OBVIOUSLY A PART OF THE ELECTRICAL WORK NECESSARY TO ITS PROPER PERFORMANCE, ALTHOUGH NOT SPECIFICALLY MENTIONED HEREIN OR SHOWN ON THE DRAWINGS, SHALL BE FURNISHED AND INSTALLED AS IF CALLED FOR IN DETAIL WITHOUT ADDITIONAL COST.

WITHOUT INTENDING TO LIMIT AND/OR RESTRICT THE VOLUME OF WORK REQUIRED AND SOLELY FOR THE CONVENIENCE OF THE CONTRACTOR, THE WORK OF THIS DIVISION SHALL, IN GENERAL COMPRISE THE FOLLOWING:
FURNISHING AND INSTALLATION OF NEW LIGHTING FIXTURES INCLUDING LAMPS AND ASSOCIATED BRANCH CIRCUITRY.
FURNISHING AND INSTALLATION OF RECEPTACLES AND ASSOCIATED BRANCH CIRCUITRY WIRING.
FURNISHING AND INSTALLATION OF NEW PANELS.
CONNECTION (WIRING) OF HVAC UNITS.
EMPTY CONDUIT RACEWAYS FOR TELEPHONE AND DATA WIRING.
CONFORMING TO ALL EXISTING CONDITIONS AT THE SITE.
TEMPORARY FACILITIES (LIGHTING AND POWER).

SHOP DRAWINGS:

SUBMIT 3 HARD COPIES AND A CD WITH ACAD 2008 TO ENGINEER COMPLETE SHOP DRAWINGS, CATALOG CUTS, WIRING DIAGRAMS AND ASSOCIATED DATA, FOR ALL MAJOR ELEMENTS OF THE ELECTRICAL WORK FOR REVIEW, CHECKING AND APPROVAL. NO EQUIPMENT SHALL BE FABRICATED, DELIVERED, ERECTED OR RECONNECTED OTHER THAN FROM DRAWINGS APPROVED BY THE ENGINEER. SHOP DRAWINGS IN THE NUMBER DIRECTED SHALL BE SUBMITTED FOR NOT LESS THAN THE FOLLOWING:
NEW PANELS (INCLUDING INTERIORS TO BE INSTALLED IN EXISTING BACK BOXES).
SWITCHES
LIGHTING FIXTURES.
WIRING DEVICES.
OCCUPANCY SENSOR
IT SHALL BE UNDERSTOOD THAT APPROVAL OF DRAWINGS WILL NOT BIND THE ENGINEER OR THE OWNER TO THE FINAL ACCEPTANCE OF SUCH EQUIPMENT AS THE COMPLETED INSTALLATION AND TEST OF EQUIPMENT AS A WHOLE MUST BE PROVIDED AND GUARANTEED HEREIN AS SPECIFIED.

MATERIALS:

GENERAL
ELECTRIC RACEWAY AND SUPPORTING SYSTEMS SHALL BE FURNISHED AND INSTALLED COMPLETE, WITH ALL MATERIALS, FITTINGS, CONNECTIONS AND ACCESSORIES NECESSARY TO PROVIDE IN EACH INSTANCE, A COMPLETE OPERATING INSTALLATION, AS DESCRIBED HEREIN, AND INDICATED ON THE DRAWINGS.
THE DRAWINGS ARE DIAGRAMMATIC AND GENERALLY INDICATIVE OF THE WORK TO BE INSTALLED, BUT DO NOT SHOW ALL BENDS, FITTINGS, AND BOXES WHICH MAY BE REQUIRED. THE CONTRACTOR SHALL CAREFULLY INVESTIGATE THE STRUCTURAL AND FINISH CONDITIONS AFFECTING ALL HIS WORK AND ARRANGE SAME ACCORDINGLY, FURNISHING SUCH FITTINGS, BOXES AND SIMILAR ITEMS AS MAY BE REQUIRED TO MEET SUCH CONDITIONS.

WIRING:
ALL WIRE AND CABLE, AS INDICATED, SPECIFIED OR REQUIRED, SHALL BE INSTALLED COMPLETE, INCLUDING ALL NECESSARY SPLICES AND CONNECTIONS TO EQUIPMENT DEVICES.
ALL WIRE NO. 8 WIRE AND LARGER SHALL BE SINGLE CONDUCTOR STRANDED COPPER OF NOT LESS THAN 98% CONDUCTIVITY, WITH 600 VOLT WITH THHN INSULATION (THWN FOR DAMP LOCATIONS). WIRE NO. 10 AWG AND SMALLER SHALL BE SOLID COPPER.
WIRE AND CABLE SHALL BE NO. 12 AWG MINIMUM, UNLESS, U.O.N
20A AND 20A BRANCH CIRCUITS SHALL UTILIZE #12 L & N CONDUCTORS, U.O.N.
25A AND 30A BRANCH CIRCUITS SHALL UTILIZE #10 L & N CONDUCTORS, U.O.N
35A THROUGH 50A BRANCH CIRCUITS SHALL UTILIZE #8 L & N CONDUCTORS, U.O.N.
ALL BRANCH CIRCUITS SHALL HAVE GROUND CONDUCTORS IN ACCORDANCE WITH TABLE 250-122 OF THE NEC, U.O.N.
SUB FEEDERS AND BRANCH CIRCUITS IN EXCESS OF 100LF AND LESS THAN 200LF SHALL UTILIZE THE NEXT LARGER SIZE CONDUCTOR, U.O.N.
BRANCH CIRCUIT NUMBERS INDICATED ON THE DRAWINGS ARE FOR IDENTIFICATION PURPOSES ONLY AND DO NOT NECESSARILY REFER TO PANELBOARD CIRCUIT NUMBERS. BRANCH CIRCUITS SHALL BE CONNECTED TO CIRCUITS ON PANELBOARDS SO AS TO SECURE A REASONABLE BALANCE ON THE THREE PHASES. WHERE MORE THAN ONE CIRCUIT, WITH A COMMON NEUTRAL IS INSTALLED IN THE SAME CONDUIT, EACH PHASE WIRE SHALL BE CONNECTED TO A DIFFERENT LEG OF THE SYSTEM.
ALL CONDUCTORS SHALL BE COLOR CODED THROUGHOUT AND NUMBERED AND TAGGED AT EACH JUNCTION BOX, PULL BOX, PANEL AND DEVICE WITH SUITABLE FIREPROOF TAGS OR ADHESIVE IDENTIFICATION BANDS.

CONDUIT:
EXCEPT AS OTHERWISE INDICATED OR SPECIFIED, ALL WIRING INSIDE AND BEYOND CONFINES OF ELECTRIC CLOSET SHALL BE INSTALLED IN EMT (ELECTROGALVANIZED STEEL ELECTRICAL METALLIC TUBING).
RGS SHALL BE UTILIZED FOR EXTERIOR INSTALLATIONS WHERE EXPOSED
PVC MAY BE USED FOR INSTALLATION WHERE BURIED BELOW GRADE AND WHERE EMBEDDED IN A COVER OF AT LEAST 2"s OF CONCRETE WITH LOCAL DoB "SPECIAL PERMISSION"
LIQUIDTIGHT FLEXIBLE, GALVANIZED STEEL CONDUIT, WITH CONTINUOUS COPPER BONDING CONDUCTOR, SHALL BE USED FOR CONNECTIONS, NOT EXCEEDING 18" IN LENGTH, TO MOTORS AND AT A OTHER LOCATIONS WHERE VIBRATION, OR MOVEMENT ARE ENCOUNTERED.
UNLESS OTHERWISE INDICATED OR SPECIFIED, ALL WIRING SHALL BE INSTALLED CONCEALED IN CEILINGS, WALLS, SLABS, PIPE CHASES AND FURRED SPACES WHENEVER POSSIBLE.
CONDUIT AND FITTINGS SHALL CONFORM TO LATEST ACCEPTABLE CODE.
CONDUIT SHALL BE 3/4" TRADE SIZE MINIMUM, U.O.N
ALL CONDUITS WHICH ARE TO REMAIN EMPTY FOR FUTURE INTRODUCTION OF CONDUCTORS SHALL BE PROVIDED WITH A #12 NYLON DRAG WIRE WITH IDENTIFICATION TAG AT BOTH ENDS.
METAL CLAD CABLE (MC) CAN BE USED FOR FINAL CONNECTION OF LIGHTING AND, WITH WRITTEN PERMISSION OF THE ENGINEER, APPLIANCE BRANCH CIRCUITRY IN VOIDS OF CEILING AND PARTITIONS. PROVIDED THAT THIS TYPE OF WIRING IS ACCEPTABLE TO THE BUILDING OWNER OR HIS REPRESENTATIVE, AND IN COMPLIANCE WITH GOVERNING ELECTRICAL CODE. VERIFY ALL OF THE ABOVE PRIOR TO SUBMITTAL OF BID PROPOSAL. WHEN THIS METHOD OF WIRING IS USED HOMERUNS MUST BE IN EMT.
CONDUIT FITTINGS SHALL BE APPROPRIATE FOR USE WITH THE CONDUIT TYPE AND LOCATION – COMPRESSION OR TWO SCREW FITTINGS FOR EMT, THREADED FITTINGS FOR RGS, SOCKET FITTINGS FOR PVC, ETC...

JUNCTION BOXES:
JUNCTION BOXES AND PULL BOXES SHALL BE PROVIDED WHERE INDICATED OR SPECIFIED, WHERE REQUIRED BY CODE AND WHERE NECESSARY TO FACILITATE THE INSTALLATION OF EQUIPMENT OR WIRING
THEY SHALL BE NEMA 3R FOR EXTERIOR LOCATIONS
THEY SHALL BE APPROPRIATE FOR USE WITH THE CONDUIT TYPE AND LOCATION – PLASTIC FOR PVC, SHEET METAL FOR EMT AND CAST STL OR DUCTIL IRON FOR RGS, ETC...

OUTLET BOXES:
EACH OUTLET FOR LIGHTING FIXTURE, WALL SWITCH, WALL RECEPTACLE, TELEPHONE OR OTHER USE SHALL BE PROVIDED WITH AN OUTLET BOX SUITABLE FOR THE USE FOR WHICH THE OUTLET IS TO BE INSTALLED AND TO THE LOCATION IN WHICH IT OCCURS, SECURED FIRMLY IN PLACE AND SET TRUE AND SQUARE WITH THE FINISHED SURFACE.
THEY SHALL BE NEMA 3R FOR EXTERIOR LOCATIONS
THEY SHALL BE APPROPRIATE FOR USE WITH THE CONDUIT TYPE AND LOCATION – SHEET METAL FOR EMT AND CAST STL OR DUCTIL IRON FOR RGS, ETC...

FASTENINGS, SUPPORTS AND HANGERS:
ALL PARTS OF THE ELECTRICAL INSTALLATION SHALL BE ADEQUATELY SUPPORTED FROM THE BUILDING CONSTRUCTION USING APPROVED CLAMP SCREWS WITH INSERTS OR EXPANSION ANCHORS, EXPANSION BOLTS AND TOGGLE BOLTS "IN NO CASE SHALL THE HUNG CEILING MEMBERS OR WIRES BE USED TO SUPPORT CONDUIT".
ALL FASTENINGS, SUPPORTS, CLAMPS, ANCHORS, AND SIMILAR ITEMS SHALL BE OF TYPE SUITABLE FOR THE PURPOSE – IF SUPPORTING LOADS IN TENSION IN EXCESS OF 200#S OR LOADS IN SHEAR IN EXCESS OF 400#S THE CONTRACTOR SHALL PROVIDE A REPORT CERTIFIED BY AN ENGINEER ATTESTING TO THE VORACITY OF HIS SELECTION

7. WIRING DEVICES:
ALL DEVICES SHALL BE SPECIFICATION GRADE, U.L. APPROVED.
A. DUPLEX RECEPTACLE 20 AMP, 2 POLE, 3 WIRE, 125 V, GRD. TYPE HUBBELL #5362 WHI, OR APP. EQUAL.
B. SINGLE RECEPTACLE 20 AMP, 2 POLE, 3 WIRE, 125 V, GRD. TYPE HUBBELL #5361 WHI, OR APP. EQUAL.
C. SINGLE POLE SWITCH 20 AMP, 125 V, GRD. TYPE, HUBBELL #1221 WHI, OR APP. EQUAL.
D. THREE WAY SWITCH 20 AMP, 125 V, GRD. TYPE, HUBBELL #1223 WHI, OR APP. EQUAL.
E. PLATE FOR SINGLE SWITCH – SMOOTH NYLON WHITE, HUBBELL #PIW, OR APP. EQUAL.
F. PLATE FOR DUPLEX RECEPTACLE – SMOOTH NYLON WHITE, HUBBELL #P8W, PR APP. EQUAL.
G. PLATE FOR SINGLE RECEPTACLE – SMOOTH NYLON WHITE, HUBBELL #P7W, OR APP.
H. WHERE MORE THAN ONE SWITCH OR RECEPTACLE ARE PLACED IN THE SAME LOCATION CONTRACTOR SHALL GANG DEVICES AND USE COMMON MULTI GANG PLATES.
I. ALL SWITCHES SHALL BE QUIET TYPE.
J. ALL DEVICES AND PLATES SHALL BE FURNISHED IN WHITE COLOR. OR AS INDICATED BY THE ARCHITECT

8. PANELBOARD AND CABINETS
A. GENERAL: TIN PLATED COPPER BUSSES, BOLTED BUS BREAKER CONNECTIONS, SOLDERLESS LUGS, DISTRIBUTIVE PHASING, SEPARATE EQUIPMENT GROUNDING BAR, NEUTRAL BAR.
B. CABINETS: GALVANIZED BOXES, BONDERIZED ENAMELED TRIMS AND DOORS, INDICATING TRIM CLAMPS. HINGED DOORS WITH LOCKS AND LATCHES, ALL KEYED ALIKE. PROVIDE ALL NECESSARY STRUCTURAL SUPPORTS FOR MOUNTING PANELBOARDS. GALVANIZED UNISTRUCT OR EQUAL CHANNEL IS RECOMMENDED. NEMA 1 ENCLOSURE FOR INTERIOR NEMA 3R ENCLOSURE FOR EXTERIOR.
C. POWER, LIGHTING AND MISCELLANEOUS: BUS STRUCTURE AND MAIN LUGS OR MAIN BREAKER WITH CURRENT RATINGS (INCLUDING CAPACITY) AS INDICATED ON PANELBOARD SCHEDULE. PROVIDE BOLT ON, THERMAL MAGNETIC QUICK-MAKE AND CIRCUIT BREAKERS TYPE, COMMON TRIP WHEN MULTIPOLE, ARRANGED IN TWO VERTICAL ROWS, ODD NUMBERS ON LEFT, EVEN NUMBERS ON RIGHT, WITH PERMANENT NUMBER TABS. WESTINGHOUSE TYPE NBQ OR EQUAL BY G.E., ITE, SQUARE D, OR APPROVED EQUAL, USING QUICKLAG "B" CIRCUIT BREAKERS. BREAKERS MUST OCCUPY POSITION AND NUMBER ASSOCIATED ON PANELBOARD SCHEDULE.
D. PANELBOARD SCHEDULES: PROVIDE A TYPED PANELBOARD SCHEDULE ENCLOSED IN A PLASTIC ENVELOPE ON THE INSIDE OF THE PANEL DOOR, INDICATING CIRCUIT NUMBERS AND CORRESPONDING LOADS AS SHOWN ON THE PANELBOARD SCHEDULE. APPLIES TO NEW AND EXISTING PANELS.

9. SELECTION OF OVERCURRENT PROTECTION AND SWITCHING DEVICES FOR LIGHT AND POWER DISTRIBUTION
A. DEVICES SHALL HAVE VOLTAGE RATINGS SUITABLE FOR THE SUPPLY CHARACTERISTICS TO WHICH THEY ARE APPLIED.

B. SHORT CIRCUIT CURRENT RATINGS, AND THE MANUFACTURER'S LABELS ATTESTING TO THESE RATINGS (BASED ON U.L. LISTINGS), SHALL BE REQUIRED FOR OVERCURRENT PROTECTION AND SWITCHING DEVICES, WHERE THEY ARE INDIVIDUALLY MOUNTED (AS FUSED SWITCHES OR AS FUSED SWITCH BUS DUCT PLUG-IN DEVICES). AND FOR THE EQUIPMENT ASSEMBLIES WHEN THEY ARE INCORPORATED IN PANELS. SWITCHBOARDS, ETC. SUCH RATINGS SHALL BE IN ACCORDANCE WITH THE FOLLOWING:-
1. IN ORDER TO INSURE THAT THEY ARE AT LEAST EQUAL TO THE AVAILABLE FAULT CURRENT, MINIMUM RATINGS HAVE BEEN SPECIFIED HEREIN FOR THE INDIVIDUAL OVERCURRENT DEVICE TYPES, AND OTHER ASSEMBLIES OF DEVICES. "SERIES CONNECTED RATINGS" WILL BE ACCEPTABLE FOR CIRCUIT BREAKER TYPE PANELBOARDS, THESE MINIMUM RATINGS ARE BASED ON THE USE OF UPSTREAM FUSES WHICH SHALL BE SPECIFICALLY TESTED WITH THE EC's SELECTED CIRCUIT BREAKERS, AND SHALL BE U.L. LISTED ACCORDINGLY, PROVIDE THE ENGINEER ALL PERTINENT U.L. DOCUMENTATION AND ARRANGE TO REPLACE EXISTING SERVICE SWITCH FUSES AS REQUIRED TO OBTAIN REQUIRED SERIES RATING.
2. WHERE SUCH FUSE-CIRCUIT BREAKER SERIES RATINGS ARE NOT AVAILABLE FROM A PARTICULAR MANUFACTURER, A CURRENT LIMITING CIRCUIT BREAKER MAY BE UTILIZED AS THE UPSTREAM DEVICE IN ORDER TO OBTAIN THE REQUIRED SERIES RATED. SUCH CURRENT LIMITING BREAKERS SHALL BE INCORPORATED AS MAIN DEVICES IN THE PANELBOARDS, AS PART OF UPSTREAM PANELBOARDS, METERING ASSEMBLIES, OR AS INDIVIDUALLY MOUNTED DEVICES OR BUS DUCT PLUG-IN-DEVICES, AS THE CASE MAY BE. WHERE THE REQUIRED RATINGS CAN BE MET WITH MAIN OR UPSTREAM NON-CURRENT LIMITING BREAKERS HAVING APPROPRIATE INTERRUPTING CAPACITIES AS APPROVED BY U.L., SUCH ARRANGEMENTS WILL ALSO BE CONSIDERED ACCEPTABLE.

C. IN ADVANCE OF, OR IN CONJUNCTION WITH, THE SUBMISSION OF SHOP DRAWINGS FOR APPROVAL, PROVIDE DATA DEFINING IN DETAIL HOW THE REQUIRED SHORT CIRCUIT CURRENT RATINGS WILL BE ACHIEVED WITH THE EQUIPMENT BEING FURNISHED. THE DATA SHALL, IN NARRATIVE OR GRAPHIC FASHION, FULLY DEFINE HOW THE VARIOUS DEVICES, INDIVIDUALLY, OR IN COMBINATION WITH THE "FULLY RATED" OR "SERIES CONNECTED" SHORT CIRCUIT REQUIREMENTS. INCLUDE SPECIFICATIONS FROM MANUFACTURER AS TO THE U.L. APPROVALS FOR THESE RATINGS FOR ALL PROPOSED EQUIPMENT. ALL OVERCURRENT PROTECTION AND SWITCHING DEVICES SHALL BE U.L. LISTED AS SUITABLE FOR THE TERMINATION OF 75°C CONDUCTORS, SIZED IN ACCORDANCE WITH THEIR 75°C AMPACITY RATINGS. DEVICES SHALL BE SPECIFICALLY IDENTIFIED ACCORDINGLY AND SHALL BEAR THE DESIGNATION "60°/75°C" OR "75°C", REGARDLESS OF WHETHER INCORPORATED IN PANELBOARDS, SWITCHBOARDS, OR OTHER ASSEMBLIES OR WHETHER INDIVIDUALLY MOUNTED.

D. SELECT OVERCURRENT PROTECTION AND SWITCHING DEVICES AS FOLLOWS:

CATEGORY OF APPLICATION	ACCEPTABLE DEVICE TYPES (SEE LEGEND BELOW)
MAIN OR BRANCH UNIT IN DISTRIBUTION PANEL OR POWER PANEL	SW-QMQB/CF, EXCEPT, CLCB IF NEEDED IN IN ORDER TO MEET THE SPECIFIED SERIES CONNECTED RATING OF DOWNSTREAM LIGHTING OR APPLIANCE PANEL.
MAIN UNIT IN LIGHTING OR APPLIANCE PANEL	CB-SMC, EXCEPT CLCB OF NEEDED IN ORDER TO MEET SPECIFIED SERIES CONNECTED RATING OF THE PANEL.
BRANCH UNIT IN LIGHTING OR APPLIANCE PANEL	CB-SMC

E. EXPLANATION OF ABBREVIATIONS USED ABOVE IS AS FOLLOWS:

ABBREVIATION	DESCRIPTION
SW-BP	DISTRIBUTION SWITCH;BOLTED PRESSURE TYPE.
SW-QMQB	DISTRIBUTION SWITCH; QUICK-MAKE, QUICK-BREAK TYPE.
/	FUSIBLE--FUSED WITH.
CLCB-MC	CURRENT LIMITING CIRCUIT BREAKER; MOLDED CASE TYPE.

F. SELECT QUICK-MAKE, QUICK-BREAK TYPE DISTRIBUTION SWITCHES IN ACCORDANCE WITH THE FOLLOWING:

1. THEY SHALL EQUAL OR EXCEED THE PERFORMANCE REQUIRED FOR NEMA TYPE H.D HORSEPOWER RATED SWITCHES.
2. THEY SHALL HAVE ARC QUENCHERS AND CIRCUIT BREAKER TYPE PRESSURE CONTACTS.
3. WHERE INTENDED FOR PANELBOARDS OR SWITCHBOARD MOUNTING, THEY SHALL BE OF THE "BOLTED-IN" TYPE.

4. WHERE OF THE FUSIBLE TYPE. THEY SHALL BE DESIGNED FOR USE ONLY WITH CLASS "J" FUSES UP TO 600 AMPS, AND CLASS "L" FUSES ABOVE 600 AMPS, AND SHALL INCORPORATE FACTORY INSTALLED CLIPS DESIGNED TO INSURE THE USE OF PROPER FUSES. COORDINATE TO INSURE THAT FUSES SUPPLIED FOR THE PROJECT MATCH THESE FUSE GAPS.

H. SELECT CARTRIDGE FUSES IN ACCORDANCE WITH THE FOLLOWING:

1. REGARDLESS OF THE ACTUAL AVAILABLE FAULT CURRENT THEY SHALL, AT FULL RECOVERY VOLTAGE, BE CAPABLE OF SAFELY INTERRUPTING FAULT CURRENTS OF 200,000 AMPERES RMS SYMMETRICAL DELIVERABLE AT THE LINE SIDE OF THE FUSE.
2. EXCEPT AS NOTED HEREINAFTER, IN SIZES OVER 600 AMPS, THEY SHALL BE OF THE CURRENT LIMITING TYPE, U.L. LISTED AS "CLASS L".
3. THEY SHALL BE SUITABLE FOR APPLICATION TO FUSE GAPS WHICH REJECT OTHER TYPES OF FUSING. COORDINATE WITH SUPPLIER(S) OF ALL FUSIBLE SWITCH UNITS (IN PANELS, SWITCHBOARDS, ETC.) FOR THE PROJECT TO INSURE THAT FUSE GAPS MATCH THE SPECIFIED FUSE TYPES.

I. SELECT STANDARD, MOLDED CASE TYPE CIRCUIT BREAKERS IN ACCORDANCE WITH THE FOLLOWING:

1. THEY SHALL CONSIST OF MANUALLY OPERATED QUICK-MAKE, QUICK-BREAK MECHANICALLY TRIP FREE OPERATING MECHANISMS FOR SIMULTANEOUS OPERATION OF ALL POLES, WITH CONTACTS, ARC INTERRUPTERS AND TRIP ELEMENTS FOR EACH POLE, ALL ENCLOSED IN MOLDED PHENOLIC PLASTIC CASES.
2. THEIR TRIPPING UNITS SHALL BE OF THE "THERMAL MAGNETIC" TYPE HAVING BIMETALLIC ELEMENTS FOR TIME DELAY OVERLOAD PROTECTION, AND MAGNETIC ELEMENTS FOR SHORT CIRCUIT PROTECTION.
3. THEY SHALL BE MANUALLY OPERABLE BY MEANS OF TOGGLE TYPE OPERATING HANDLES HAVING "TRIPPED" POSITIONS MIDWAY BETWEEN THE "ON-OFF" POSITION.
4. THEY SHALL EACH BE CONTAINED IN AN INDIVIDUAL CASE ENCLOSING ONLY THE NUMBER OF POLES REQUIRED FOR THE PARTICULAR BREAKER.
5. WHERE NO FRAME SIZES ARE INDICATED, THEIR INTERRUPTING CAPACITIES (IN RMS SYMMETRICAL AMPERES) SHALL BE NOT LESS THAN THE FOLLOWING:

WHERE INSTALLED	INTERRUPTING CAPACITY
120/240V LIGHTING OR APPLIANCE PANE	10,000A

6. WHERE FRAME SIZES ARE INDICATED, THE INTERRUPTING CAPACITIES SHALL BE NO LESS THAN THE FOLLOWING:

WHERE INDICATED FRAME SIZE	MINIMUM ACCEPTABLE SYMMETRICAL AMPERES INTERRUPTING RATING IN RMS AMPERES
100	22,000
225	22,000
400	42,000
600	42,000
800	42,000

7. THE MINIMUM INTERRUPTING CAPACITY IN SYMMETRICAL RMS AMPERES OF THE CIRCUIT BREAKERS INTENDED FOR USE IN PANELBOARDS SHALL BE AS NOTED ABOVE. WHERE NECESSARY IN ORDER TO PROVIDE THE U.L. APPROVED "SERIES CONNECTED" SHORT CIRCUIT PANEL RATINGS SPECIFIED ELSEWHERE, BREAKERS WITH HIGHER INTERRUPTING CAPACITIES SHALL BE PROVIDED AS REQUIRED.
8. WHERE NECESSARY TO ACCOMMODATE OTHER REQUIREMENTS (E.G., PANELBOARDS TO BE CONVERTIBLE TYPE), THEIR FRAME SIZES SHALL BE INCREASED TO CONFORM TO SUCH REQUIREMENTS, FRAME SIZES BEING INDICATED ONLY AS A REFERENCE TO THE MINIMUM ACCEPTABLE INTERRUPTING RATING NOTED ABOVE.
9. THEY SHALL HAVE INTERCHANGEABLE TRIPS IN ALL SIZES FOR WHICH SUCH TRIPS ARE MANUFACTURED AS STANDARD.
10. THEY SHALL BE EQUIPPED WITH AMBIENT TEMPERATURE COMPENSATING FEATURES EXTENDED TO 40°C.
11. THEY SHALL BE EQUIPPED WITH 5 MILI AMP SENSITIVITY GROUND FAULT INTERRUPTING FEATURES WHERE SO INDICATED, AND/ OR WHERE THEY SUPPLY STANDARD CONVENIENCE RECEPTACLES IN BATHROOMS AND OTHER SUCH CODE MANDATORY LOCATIONS.
12. WHERE SINGLE POLE IN TRIP SIZES 20 AMPS OR LESS, THEY SHALL BE RATED FOR SWITCH DUTY.

J. IF REQUIRED TO PROVIDE "SERIES CONNECTED" RATINGS (AS SPECIFIED ELSEWHERE) WHERE FUSE-BREAKER RATINGS HAVE NOT BEEN LISTED BY U.L., SELECTED MOLDED CASE TYPE CURRENT LIMITING CIRCUIT BREAKERS IN ACCORDANCE WITH THE FOLLOWING:
1. IN FRAME SIZES UP TO 400 AMPS, THEY SHALL EACH BE OF THE FUSE-LESS TYPE AND HAVE AN INTERRUPTING CAPACITY OF 200,000 AMPS SYMMETRICAL AT 120/240 (240) VOLTS.
2. IN FRAME SIZES LARGER THAN 400 AMPS, THEY SHALL EACH CONSISTING OF A MOLDED CASE CIRCUIT BREAKER WITH A CURRENT LIMITING FUSE CONNECTED IN EACH POLE, AS NOTED BELOW:
A. THEIR FUSES SHALL BE EQUIPPED WITH RELEASE BUTTONS ARRANGED TO TRIP OPEN THE LATCHES OF THEIR CIRCUIT BREAKER ELEMENTS.
B. SIZING OF THE FUSES SHALL BE AS DIRECTED.
C. EACH SHALL HAVE ITS FUSES AND BREAKER ELEMENTS INTEGRALLY MOUNTED IN A SINGLE OVERALL MOLDED PHENOLIC PLASTIC CASE.
3. THEIR BREAKER ELEMENTS SHALL CONSIST OF MANUALLY OPERATED, QUICK-MAKE, QUICK-BREAK, MECHANICALLY TRIP FREE OPERATING MECHANISMS FOR SIMULTANEOUS OPERATION OF ALL POLES, WITH CONTACTS, ARC INTERRUPTERS AND TRIP ELEMENTS FOR EACH POLE.
4. THEIR BREAKER TRIPPING UNITS SHALL BE OF THE "THERMALMAGNETIC" TYPE HAVING BIMETALLIC ELEMENTS FOR TIME DELAY OVERLOAD PROTECTION, AND MAGNETIC ELEMENTS FOR SHORT CIRCUIT PROTECTION.
5. THEY SHALL BE MANUALLY OPERABLE BY MEANS OF TOGGLE TYPE OPERATING HANDLES HAVING "TRIPPED" POSITIONS MIDWAY BETWEEN THE "ON-OFF" POSITION.
6. THEY SHALL BE OF THE "BOLTED-IN" TYPE.
7. THEY SHALL HAVE INTERCHANGEABLE TRIPS.
8. THEY SHALL BE EQUIPPED WITH AMBIENT TEMPERATURE COMPENSATING FEATURES EXTENDED TO 40°C.

K. THE FUSE TO BE USED IN CURRENT LIMITING CIRCUIT BREAKER SHALL, REGARDLESS OF ACTUAL AVAILABLE FAULT CURRENT, AT FULL RECOVERY VOLTAGE, BE CAPABLE OF SAFELY INTERRUPTING FAULT CURRENTS IN THE ORDER OF 200,000 AMPERE RMS SYMMETRICAL OF 280,000 AMPERES RMS ASYMMETRICAL, THE CURRENT LIMITING FUSES SHALL COORDINATE WITH AND BACK UP THE CIRCUIT BREAKERS THEY ARE ASSOCIATED WITH SO THAT ALL FAULT OVERLOAD CURRENTS ACCRUING WITHIN THE SAFE CAPABILITY OF THE BREAKERS SHALL CAUSE THE BREAKERS TO OPEN, AND ALL CURRENTS OCCURRING BEYOND THE SAFE CAPABILITY OF THE BREAKERS SHALL CAUSE THE FUSES TO OPEN; THE OPENING OF THE FUSES BEING SUCH AS TO PREVENT DAMAGE TO ANY CIRCUIT BREAKER COMPONENT PARTS. WHERE DIRECTED, FUSES SHALL BE REDUCED IN SIZE SO AS TO PROVIDE BACKUP PROTECTION FOR DOWNSTREAM OVERCURRENT DEVICES.

L. ALL APPLICATIONS OF FUSES SHALL BE ON A "SINGLE FUSE PER PHASE LEG" (I.E., EXCLUDE FUSES IN MULTIPLE).

M. FUSES SHALL BE MOUNTED SO THAT THE LABELS SHOWING THEIR RATINGS CAN BE READ WITHOUT REQUIRING FUSE REMOVAL.

N. WHERE THE SIZE OF THE OVERCURRENT PROTECTION AND SWITCHING DEVICES ARE INDICATED BY MEANS OF SINGLE NUMBER AMPERAGES, IT SHALL BE UNDERSTOOD THAT THESE AMPERAGES REPRESENT AS APPLICABLE THE SIZE OF THE TRIPS OF FUSES SUPPLIED IN THE SMALLEST CIRCUIT BREAKER FRAMES OR SWITCHES THAT WILL HOLD THEM.

O, FURNISHED AND DEPOSIT SPARE FUSES AT THE JOB SITE AS FOLLOWS:

1. THREE SPARES FOR EACH TYPE AND SIZE, IN EXCESS OF 60 AMPERES, USED FOR INITIAL FUSING.
2. TEN PERCENT SPARES FOR EACH TYPE AND SIZE, UP TO AND INCLUDING 60 AMPERES, USED FOR INITIAL FUSING. (IN NO CASE SHALL LESS THAN THREE FUSES OF ONE PARTICULAR TYPE AND SIZE BE FURNISHED).

P. WHERE FUSES ARE REQUIRED TO BE INSTALLED IN FUSE GAPS WHICH ARE TOO LARGE OR ARE OTHERWISE NOT MATCHED TO THE FUSES, UTILIZE SINGLE STEP REDUCERS OR ADAPTORS TO ACCOMMODATE THE MOUNTING. IN ADDITION, PROVIDE CLIP CLAMPS TO ANCHOR THE REDUCERS OR ADAPTORS INTO THE FUSE GAPS.

Q. DISTRIBUTION SWITCHES OF THE QUICK-MAKE, QUICK-BREAK TYPE SHALL BE MANUFACTURED BY SIEMENS, GENERAL ELECTRIC, WESTINGHOUSE, OR SQUARE D OR OTHER APPROVED.

R. CIRCUIT BREAKERS SHALL BE MANUFACTURED BY WESTINGHOUSE, GENERAL ELECTRIC, SIEMENS, OR SQUARE D OR OTHER APPROVED.

S. FUSES SHALL BE MANUFACTURED BY BUSSMAN, OR GOULD-SHAWMUTT OR OTHER APPROVED.

10. SAFETY SWITCHES
A. SAFETY SWITCHES SHALL BE OF SIZE NOTED ON THE DRAWINGS, OR AS REQUIRED, FUSIBLE OR NON FUSIBLE AND EACH CONTAINED IN A GENERAL PURPOSE NEMA I ENCLOSURE WHEN INSTALLED INDOORS AND NEMA 3R ENCLOSURE FOR OUTDOOR INSTALLATION. ALL SWITCHES SHALL BE HEAVY DUTY TYPE AND SHALL HAVE QUICK MAKE QUICK BREAK MECHANISM

B. ALL SWITCHES SHALL BE OF PROPER HORSEPOWER RATING AS APPLICABLE AND HAVE DUAL INTERLOCKS DESIGNED TO INTERLOCK THE SWITCH BOX DOOR WITH THE SWITCH OPERATING MECHANISM.

11. GROUNDING
A. ALL ELECTRICAL WORK SHALL BE GROUNDED IN ACCORDANCE WITH NEC 250 AS AMMENDED BY LOCAL LAW
B. PROVIDE BOTH SYSTEM AND EQUIPMENT GROUNDING IN ACCORDANCE WITH THE REQUIREMENTS OF THE LOCAL INSPECTION AUTHORITIES: USE COPPER STRAPS, WIRES, AND CABLES BRAZED OR BOLTED TO CLAMPS, BUSHINGS, LUGS OR FITTINGS APPROVED FOR THE PURPOSE.
C. ALL ENCLOSURES AND OTHER NON CURRENT CARRYING METALLIC PARTS OF ELECTRICAL EQUIPMENT, RACEWAY SYSTEMS AND EQUIPMENT GROUND BUSES SHALL BE EFFECTIVELY GROUNDED TO THE BUILDING GROUNDING SYSTEMS THROUGH THE SYSTEM GROUND CONDUCTORS, METALLIC CONDUITS AND OTHER RACEWAYS AND ENCLOSURES FOR CONDUCTORS SHALL BE METALLICALLY JOINED TOGETHER INTO A CONTINUOUS ELECTRICAL CONDUCTOR, AS TO PROVIDE EFFECTIVE ELECTRICAL CONTINUITY.
D. EQUIPMENT LOCATED REMOTELY FROM THE GROUND CONDUCTORS SHALL BE GROUNDED TO THE NEAREST AVAILABLE COLD WATER PIPING, MOTOR FRAMES SHALL BE GROUNDED THROUGH THEIR CONDUITS.

12. LIGHTING FIXTURES
A. ALL LIGHTING FIXTURES SHALL BE APPROVED FOR USE IN CT.
B. ALL LIGHTING FIXTURES SHALL BE APPROVED PRIOR TO INSTALLATION
C. ALL LIGHTING FIXTURES SHALL BE FURNISHED AND INSTALLED COMPLETE, WITH NECESSARY COMPONENTS, ACCESSORIES AND LAMPS OF CORRECT TYPE AND RATING, AS INDICATED ON ARCHITECT DRAWINGS.
D. FIXTURES SHALL BE CAREFULLY SUPPORTED AND ALIGNED WITH NECESSARY HANGERS, SUPPORTING MEMBERS AND PLASTER FRAMES FOR PROPER INSTALLATION,
E. ALL FIXTURES SHALL BE PROPERLY WIRED AND CONNECTED TO BRANCH CIRCUITS, TESTED AND LEFT READY FOR OPERATION.
F. FOR TYPE, MAKE AND QUANTITIES OF LIGHTING FIXTURES REQUIRED SEE ARCHITECT'S DRAWINGS AND SPECIFICATIONS.
G. FIXTURES AND/OR FIXTURE OUTLET BOXES SHALL BE PROVIDED WITH HANGERS TO ADEQUATELY SUPPORT THE COMPLETE WEIGHT OF THE FIXTURE
H. BALLASTS: MAGNETEK #B140T/B240T OR APPROVED EQUAL FULL LIGHT OUTPUT, ELECTRONIC ENERGY SAVING, HIGH POWER FACTOR, ETL CERTIFIED SOUND RATING "A", OR AS INDICATED ON DRAWINGS
I. LAMPS, WESTINGHOUSE, SYLVANIA, OR GE, EXTENDED SERVICE OR 130 VOLT FILAMENT
J. RATING FOR INCANDESCENT LAMPS, ENERGY- SAVING TYPE (ECON-O-WATT, PER-SAVER, OR WATT-MISER) FOR FLUORESCENT. LAMP TYPES AND WATTAGES SCHEDULED ON DRAWINGS

GENERAL:

A. ALL WORK SHALL BE DONE IN STRICT COMPLIANCE WITH THE NEC, AND AS AMMENDED BY LOCAL LAW
B. CONNECTION OF NEW PANELS SHALL BE AT A TIME CONVENIENT TO THE BUILDING OWNER AFTER SUFFICIENT TIME HAS BEEN GIVEN AND HIS APPROVAL OBTAINED.
C. CONTRACTOR SHALL CHECK ALL EXISTING CONDITIONS IN THE FIELD. RELOCATE ALL EXISTING WIRING WHICH INTERFERES WITH NEW INSTALLATION AND MUST BE MAINTAINED.
D. ELECTRICAL CONTRACTOR SHALL FURNISH AND INSTALL ALL ADDITIONAL CONDUITS, CABLES AND PULL BOXES AS REQUIRED FOR ROUTING OF CONDUITS AND PULLING OF CABLES.
E. ELECTRICAL CONTRACTOR SHALL FILE AND OBTAIN AN APPROVED ELECTRICAL CERTIFICATE FROM THE BUILDING DEPT.
F. LOCATION OF ALL ELECTRICAL EQUIPMENT IS APPROXIMATE, EXACT LOCATION TO BE VERIFIED IN THE FIELD.
G. STUDY OTHER SECTIONS OF THE SPECIFICATIONS AND DRAWINGS COOPERATE WITH OTHER TRADES. COORDINATE WORK TO AVOID INTERFERENCES. WHEN IN DOUBT, CONSULT ENGINEER BEFORE PERFORMANCE.
H. PERFORM ALL NECESSARY CUTTING AND PATCHING. LEAVE PREMISES IN CONDITION SATISFACTORY TO THE ENGINEER/ARCHITECT.
I. OBTAIN PERMISSION OF ARCHITECT BEFORE CUTTING STRUCTURAL MEMBERS.
J. NOTIFY ENGINEER OF CONFLICTS BETWEEN DRAWINGS AND SPECIFICATIONS BEFORE BIDDING. THE ENGINEER'S DECISION WILL GOVERN EITHER BEFORE OR AFTER BIDDING.
K. ELECTRICAL DRAWINGS ARE DIAGRAMMATIC EXCEPT WHERE DIMENSIONED. DO NOT SCALE. FOLLOW ARCHITECTURAL, STRUCTURAL AND MANUFACTURER'S SHOP DRAWINGS FOR GREATER ACCURACY. CONSULT ENGINEER IN CASE OF DOUBT OR CONFLICT. UNLESS NOTED, FIXED DIMENSIONS ARE BASED ON THE PRODUCT OF ONE MANUFACTURER, VERIFY DIMENSIONS WITH THE PRODUCT OF THE SHOP DRAWINGS OF THE MATERIALS ACTUALLY APPROVED OR PURCHASED. THE CONTRACTOR IS RESPONSIBLE FOR ANY ADDITIONAL COST AND DELAYS IN THE WORK RESULTING FROM SUBSTITUTION UNDER THIS DIVISION; INCLUDING, BUT NOT LIMITED TO, ANY CHANGES IN DECISION, INSTALLATION,
L. EQUIPMENT, SUCH AS PANELS, JUNCTION BOXES, SAFETY SWITCHES, MOTOR STARTERS, CIRCUIT BREAKERS, AND SIMILAR ITEMS SHALL BE IDENTIFIED BY NAME, WITH ENGRAVED LAMINATED PHENOLIC NAMEPLATES NOT SMALLER TAN 1" X 3" WITH CHARACTERS NOT LESS THAN 1/2" AND FASTENED WITH COUNTER OVAL HEAD BRASS MACHINE SCREWS OR RIVETS. 18. TELEPHONE & SIGNAL REQUIREMENTS
M. EMPTY CONDUIT SHALL BE OF SIZE INDICATED AND STUB UP 6" ABOVE HUNG CEILING FROM OUTLET BOX.
N. TELEPHONE OUTLETS SHALL HAVE SMOOTH WHITE NYLON PLATE WITH BUSHED HOLE. OR AS INDICATED BY THE ARCHITECT.
O. CONDUIT SHALL BE 3/4" MIN. UNLESS OTHERWISE NOTED.
P. COLOR, FINISH AND TYPE OF PLATES SHALL BE APPROVED BY THE ARCHITECT PRIOR TO PURCHASE.
Q. ALL CUTTING PATCHING AND FIRE-STOPPINGREQUIRED FOR WORK OF THIS DIVISION IS INCLUDED HEREIN. COORDINATION WITH GENERAL CONTRACTOR AND OTHER TRADES IS IMPERATIVE. CONTRACTOR SHALL BEAR THE RESPONSIBILITY FOR AND THE ADDED EXPENSE OF ADJUSTING FOR IMPROPER HOLES, SUPPORTS, ETC
R. SINGLE GANG BOXES SHALL BE PROVIDED WHERE TELEPHONE OUTLETS ARE INDICATED. 19. AS-BUILT (DRAWINGS) UPON COMPLETION OF THE ELECTRICAL INSTALLATION,
S. THE CONTRACTOR SHALL FURNISH THE ENGINEER TWO SETS OF AS BUILT DRAWINGS IN HARD COPY AND ACAD 2008 FOR REVIEW AND APPROVAL. AFTER THE ENGINEERS APPROVAL OF THE DRAWINGS, THE CONTRACTOR SHALL FURNISH THE OWNER WITH ACAD 2008 AND REPRODUCIBLE SETS OF THE SAME FOR HIS RECORDS. THE AS-BUILT DRAWINGS SHALL SHOW THE FOLLOWING INFORMATION:
1. LOCATION OF ALL RECEPTACLES, SWITCHES AND LIGHTING FIXTURES.
2. LOCATION OF JUNCTION BOXES, PULL BOXES AND PANELS.
3. LOCATION (ROUTING) OF ALL BRANCH CIRCUITS AND PANELS.
4. DESIGNATION OF ALL BRANCH CIRCUITS.
5. WIRE SIZES WHERE WIRE LARGER THAN #12 AWG IS USED.
6. CONDUIT SIZE
7. LOCATION OF ALL FIRE ALARM DEVICES.
8. FIELD ANNOTATED (CORRECTED) CONTRACT DRAWINGS ARE NOT ACCEPTABLE AS "AS-BUILT" OR "SHOP DRAWINGS".
T. IN THE EVENT OF ANY CONFLICT BETWEEN INFORMATION ON THE DRAWINGS AND INFORMATION IN THE SPECS, THE MOST COSTLY ALTERNATIVE WILL GOVERN.
U. APPLY FIRESTOPPING TO ELECTRICAL PENETRATIONS OF FIRE-RATED FLOOR AND WALL ASSEMBLIES TO RESTORE ORIGINAL FIRE-RESISTANCE RATING OF ASSEMBLY. FIRESTOPPING MATERIALS AND INSTALLATION REQUIREMENTS ARE SPECIFIED IN DIVISION 7 SECTION "THROUGH-PENETRATION FIRESTOP SYSTEMS."

LFG
LANDMARK FACILITIES GROUP, INC.
252 East Avenue
Norwalk, CT 06855
(203) 866-4626 Tel
(203) 866-8019 Fax

REV	DATE	DESCRIPTION
	12-2-22	ISSUE FOR CONSTRUCTION

DISHWASHER UPGRADE

NEW LEBANON SCHOOL
25 MEAD AVENUE
GREENWICH, CT 06830

SCALE: AS NOTED
DATE: 17 Nov 2022
APPROVED BY: LFG
DRAWN BY: LFG
CHECKED BY: LFG

ELECTRICAL SPECIFICATIONS

BID NUMBER: 2396-22
LFG JOB NUMBER: 1018.***:***
DRAWING NUMBER: E-200

PROJECT DESCRIPTION

1. THE PRIMARY INTENT OF THIS PROJECT IS TO REPLACE AND EXISTING UNDERCOUNTER DISHWASHER WITH A NEW COMMERCIAL APPLIANCE. THE CONTRACTOR SHALL BE RESPONSIBLE FOR A COMPLETE INSTALLATION INCLUDING (BUT NOT LIMITED TO) THE FOLLOWING:

– DISCONNECTION AND REMOVAL AND EXISTING DISHWASHER. CUTTING/CAPPING OF HOT WATER PIPING AT LOCATION SUITABLE FOR REUSE.
– NEW ELECTRICAL WORK REQUIRED TO SUPPORT DISHWASHER.
– NEW PLUMBING WORK INCLUDING MODIFICATION OF EXISTING POTABLE WATER AND SANITARY PIPING NECESSARY TO SUPPORT NEW DISHWASHER.
– INSTALLATION OF NEW PLUMBING ACCESSORIES INCLUDING WATER FILTER AND WASTE TEMPERING DEVICE.
– PIPING AS–BUILT DRAWINGS.
– PROJECT O&M MANUALS AT PROJECT CLOSEOUT 1–2 HRS OF OWNER TRAINING ON NEW APPLIANCE (PROVIDED BY EQUIPMENT VENDOR).

2. ALL BIDDERS SHALL VISIT PROJECT SITE TO THOROUGHLY FAMILIARIZE THEMSELVES WITH EXISTING CONDITIONS. CLAIMS FOR EXTRA PAYMENTS FOR WORK, WHICH COULD HAVE BEEN IDENTIFIED VIA CAREFUL SITE INSPECTION, WILL NOT BE ACKNOWLEDGED.

3. PROJECT SCHEDULE: ALL WORK SHALL BE SUBSTANTIALLY COMPLETE NO LATER 2023 WINTER RECESS (FEBRUARY 19, 2023). AN ADDITIONAL TWO WEEKS WILL BE PERMITTED FOR PROJECT CLOSEOUT. IF OVERTIME LABOR IS REQUIRED TO MEET PROJECT DEADLINE, THIS SHALL BE INCLUDED IN CONTRACTOR'S BASE BID.

UPON RECEIPT OF AWARD LETTER FROM OWNER, CONTRACTOR SHALL IMMEDIATELY BEGIN PREPARATION OF EQUIPMENT SUBMITTALS. .

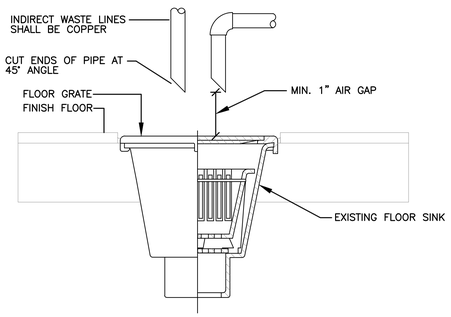

FLOOR SINK–DETAIL
NO SCALE

PLUMBING SYMBOL LIST

	NOTE: NOT ALL SYMBOLS ARE USED
SYMBOL	DESCRIPTION
————	SANITARY PIPE ABOVE FLOOR/SLAB (S)
- - - - - - - -	VENT PIPE (V)
——— - - ———	EXISTING COLD WATER PIPING
——— – – ———	EXISTING HOT WATER PIPING
——— - - - ———	EXISTING HOT WATER RETURN PIPING
———C	PIPE DROP OR DOWN THRU SLAB

PLUMBING ABBREVIATION LIST

SYMBOL	DESCRIPTION
CW	COLD WATER
HW	HOT WATER
HWR	HOT WATER RETURN
SAN	SANITARY

DISHWASHER SCHEDULE

Item	Qty	Description
		Jackson WWS Model No. TEMPSTAR VENTLESS (VER) TempStar® Dishwasher, door type, high temperature, with ventless & energy recovery, electric tank heat with built-in 70° F booster, approximately (39) racks/hour (0.89 gallons per rack), universal (straight-thru/corner) type, stainless steel exterior, electro mechanical controls, pressure regulator provided (for installation by others), Sani-Sure™, door interlock, dishtable not included, cETLus, ETL-Sanitation, ENERGY STAR® (Requires Assembly)
	1 ea	1 year parts & labor warranty, continental USA, standard
	1 ea	70 degree rise booster heater, standard
	1 ea	Voltage to be verified with jobsite 208V/60HZ/3PH
	1 ea	05700-002-61-29 Water Hammer Arrestor, 3/4"
	1 ea	06401-004-85-80 Drain Water Tempering Kit (DynaStar models, TempStar® models and NXP-HTD)
	1 ea	04730-003-05-76 Scaltrol Water Treatment
	1 ea	RSC-100 Replacement Cartridge for Scaltrol Water Treatment
	1 ea	05700-002-75-59 False panel kit, for corner installation (TempStar® standard height models)
	1 st	05340-002-34-86 Flanged feet (TempStar® standard height models, Conserver® models and NXP-HTD model)
	1 ea	DTC-570-36L Dishtable, clean, straight design, 26"W, left side installation
	1 ea	DTS-570-36L Dishtable, soiled, 36"W, straight, left side installation, 20" x 20" sink
		.
	1 ea	Krowne 17-109WL Krowne Royal Series, pre-rinse Assembly, with add-on faucet, wall mount, 8" centers, spring action flexible gooseneck, 38"H stainless steel hose with 15" overhang & 1.2 GPM spray head, built in check valves, 2.0 GPM add-on faucet with 12" swing spout, quarter-turn ceramic cartridge valves, includes wall bracket & mounting kit, chrome plated brass base, low lead compliant, includes internal check valves to prevent backflow & cross contamination, NSF (interchangeable with most brands) (ships pre-assembled)
	1 ea	Krowne 3 year warranty, standard

LFG
LANDMARK FACILITIES GROUP, INC.
252 East Avenue
Norwalk, CT 06855
(203) 866-4626 Tel
(203) 866-8019 Fax

REV	DATE	DESCRIPTION
	12-2-22	ISSUE FOR CONSTRUCTION

DISHWASHER UPGRADE

NEW LEBANON SCHOOL
25 MEAD AVENUE
GREENWICH, CT 06830

SCALE: AS NOTED	APPROVED BY: LJG	DRAWN BY: LJG
DATE: 17 Nov 2022		CHECKED BY: LJG

PLUMBING NOTES AND DETAILS

BID NUMBER:	LFG JOB NUMBER:	DRAWING NUMBER:
2396-22	1018.***.***	P-001

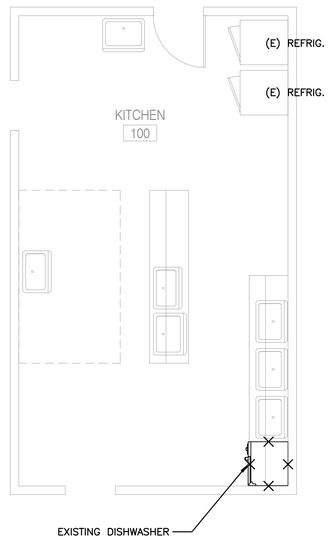

1 FIRST FLOOR PLUMBING DEMO PLAN
SCALE: 1/4" = 1'-0"

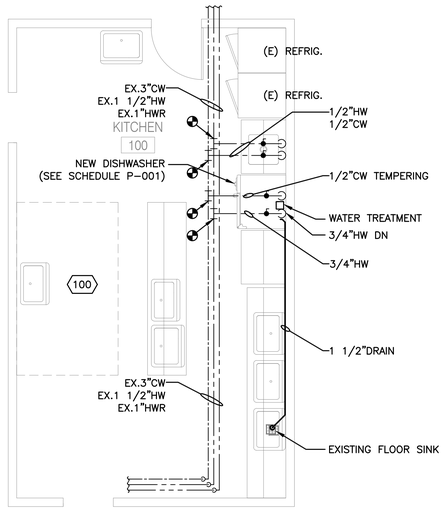

1 FIRST FLOOR PLUMBING PLAN
SCALE: 1/4" = 1'-0"

GENERAL NOTES

1. THE DRAWINGS ARE DIAGRAMMATIC IN NATURE AND ARE NOT INTENDED TO SHOW EVERY FITTING (i.e. PULL BOX), ETC. THE CONTRACTOR SHALL COORDINATE WITH ALL TRADES PRIOR TO INSTALLATION OF ANY MATERIAL OR EQUIPMENT.

CODED NOTES

100 SCOPE OF WORK IN KITCHEN TO INCLUDE REMOVAL OF EXISTING DISHWASHER AND ASSOCIATED PLUMBING TO BE REPLACED WITH NEW DISHWASHER IN LOCATION AS SHOWN. NEW SOIL SINK. NO OTHER WORK REQUIRED IN KITCHEN.

LFG
LANDMARK FACILITIES GROUP, INC.
252 East Avenue
Norwalk, CT 06855
(203) 866-4626 Tel
(203) 866-8019 Fax

REV	DATE	DESCRIPTION
	12-2-22	ISSUE FOR CONSTRUCTION

DISHWASHER UPGRADE

NEW LEBANON SCHOOL
25 MEAD AVENUE
GREENWICH, CT 06830

SCALE: AS NOTED	APPROVED BY: LJG	DRAWN BY: LJG
DATE: 17 Nov 2022		CHECKED BY: LJG

PLUMBING PLAN

BID NUMBER:	LFG JOB NUMBER:	DRAWING NUMBER:
2396-22	1018.***.***	P-100

PLUMBING SPECIFICATIONS

1. GENERAL:

A. THE "GENERAL CONDITIONS OF THE CONTRACT FOR CONSTRUCTION," AIA DOCUMENT A201, LATEST EDITION, AND THESE SPECIFICATIONS AS APPLICABLE ARE PART OF THIS CONTRACT.

B. APPLICABLE CODE IS THE INTERNATIONAL PLUMBING CODE, 2021 AND ALL, LAWS AND REGULATIONS GOVERNING OR RELATING TO ANY PORTION OF THIS WORK ARE HEREBY INCORPORATED INTO AND MADE A PART OF THESE SPECIFICATIONS, AND THEIR PROVISIONS SHALL BE CARRIED OUT BY THE CONTRACTOR WHO SHALL INFORM THE OWNER, PRIOR TO SUBMITTING A PROPOSAL, OF ANY WORK OR MATERIAL WHICH VIOLATES ANY OF THE ABOVE LAWS AND REGULATIONS. ANY WORK DONE BY THE CONTRACTOR CAUSING SUCH VIOLATION SHALL BE CORRECTED BY THE CONTRACTOR.

C. INVESTIGATE EACH SPACE THROUGH WHICH EQUIPMENT MUST BE MOVED. WHERE NECESSARY, EQUIPMENT SHALL BE SHIPPED FROM MANUFACTURER IN SECTIONS OF SIZE SUITABLE FOR MOVING THROUGH AVAILABLE RESTRICTIVE SPACES. ASCERTAIN FROM BUILDING OWNER AND TENANT AT WHAT TIMES OF DAY EQUIPMENT MAY BE MOVED THROUGH ALL AREAS.

D. DRAWINGS ARE DIAGRAMMATIC AND INDICATE GENERAL ARRANGEMENT OF SYSTEMS AND WORK. PIPE ROUTING IS SHOWN DIAGRAMMATICALLY AND DOES NOT SHOW ALL OFFSETS, DROPS AND RISES OF RUNS. THE CONTRACTOR SHALL ALLOW IN HIS PRICE FOR ROUTING OF PIPE TO AVOID OBSTRUCTIONS. COORDINATION WITH THE EXISTING SERVICES, INCLUDING THOSE OF OTHER TRADES IS REQUIRED. MAINTAIN HEADROOM AND SPACE CONDITIONS.

E. INSTALL WORK SO AS TO BE READILY ACCESSIBLE FOR OPERATION, MAINTENANCE AND REPAIR. MINOR DEVIATIONS FROM DRAWINGS MAY BE MADE TO ACCOMPLISH THIS, BUT CHANGES WHICH INVOLVE EXTRA COST SHALL NOT BE MADE WITHOUT APPROVAL.

F. REMOVAL AND RELOCATION OF CERTAIN EXISTING WORK WILL BE NECESSARY FOR THE PERFORMANCE OF THE GENERAL WORK. ALL EXISTING CONDITIONS CANNOT BE COMPLETELY DETAILED ON THE DRAWINGS. THE CONTRACTOR SHALL SURVEY THE SITE AND INCLUDE ALL CHANGES IN MAKING UP THE WORK PROPOSAL.

G. CONNECTIONS TO EXISTING WORK: INSTALL NEW WORK AND CONNECT TO EXISTING WORK WITH MINIMUM INTERFERENCE TO EXISTING FACILITIES. TEMPORARY SHUTDOWNS OF EXISTING SERVICES SHALL BE PERFORMED AT NO ADDITIONAL CHARGES, AT TIMES NOT TO INTERFERE WITH NORMAL OPERATION OF EXISTING FACILITIES AND ONLY WITH WRITTEN CONSENT OF OWNER. MAINTAIN CONTINUOUS OPERATION OF EXISTING FACILITIES AS REQUIRED WITH NECESSARY TEMPORARY CONNECTIONS BETWEEN NEW AND EXISTING WORK. CONNECT NEW WORK TO EXISTING WORK IN NEAT AND ACCEPTABLE MANNER. RESTORE EXISTING DISTURBED WORK TO ORIGINAL CONDITION.

H. DISCONNECT, REMOVE AND/OR RELOCATE EXISTING MATERIAL, EQUIPMENT AND OTHER WORK AS NOTED OR REQUIRED FOR PROPER INSTALLATION OF NEW WORK.

I. THE CONTRACTOR SHALL KEEP ALL EQUIPMENT AND MATERIALS, AND ALL PARTS OF THE BUILDING, EXTERIOR SPACES AND ADJACENT STREETS, SIDEWALKS AND PAVEMENTS, FREE FROM MATERIAL AND DEBRIS RESULTING FROM THE EXECUTION OF THIS WORK. EXCESS MATERIALS WILL NOT BE PERMITTED TO ACCUMULATE EITHER ON THE INTERIOR OR THE EXTERIOR.

J. THE LOCATIONS OF THE EXISTING SERVICES ARE BELIEVED TO BE AS INDICATED ON THE DRAWINGS. THE CONTRACTOR SHALL VERIFY THE ACTUAL LOCATION OF THESE SERVICES AND NOTIFY THE ENGINEER OF ANY DISCREPANCIES PRIOR TO COMMENCING ANY WORK.

K. SEAL OPENINGS THROUGH PARTITIONS, WALLS AND FLOORS WITH NON-SHRINKING FIRE PROOF CAULKING OR OTHER NON-COMBUSTIBLE MATERIAL.

L. PROVIDE ALL NECESSARY FLASHING AND COUNTERFLASHING TO MAINTAIN THE WATERPROOFING INTEGRITY OF THIS BUILDING AS REQUIRED BY THE INSTALLATION OR REMOVAL OF PIPING AND EQUIPMENT. PROVIDE EQUIPMENT CURBS AS REQUIRED.

M. ALL PRESENT MATERIAL, EQUIPMENT AND CONSTRUCTION DEBRIS TO BE REMOVED UNDER THIS CONTRACT SHALL BECOME THE PROPERTY OF THE CONTRACTOR WITH THE EXCEPTION OF SPECIFIC EQUIPMENT AND APPARATUS REQUESTED BY THE BUILDING REPRESENTATIVE, ARCHITECT OR AS NOTED TO BE RELOCATED ON THE DRAWINGS. REMOVED EQUIPMENT SHALL BE PROPERLY DISPOSED OF BY THIS CONTRACTOR.

N. MATERIALS AND WORKMANSHIP, UNLESS OTHERWISE NOTED, SHALL BE IN ACCORDANCE WITH BUILDING STANDARDS.

O. THE WORK IN THE BUILDING SHALL BE DONE WHEN AND AS DIRECTED, AND IN A MANNER SATISFACTORY TO THE OWNER. THE WORK SHALL BE PERFORMED SO AS TO CAUSE THE LEAST POSSIBLE INCONVENIENCE AND DISTURBANCE TO THE PRESENT OCCUPANTS.

P. THE CONTRACTOR'S PROPOSAL FOR ALL WORK SHALL BE PREDICATED ON THE PERFORMANCE OF THE WORK DURING REGULAR WORKING HOURS. WHEN SO DIRECTED, HOWEVER, THE CONTRACTOR SHALL INSTALL WORK IN OVERTIME AND THE ADDITIONAL COST TO BE CHARGED THEREFORE SHALL BE ONLY THE "PREMIUM" PORTION OF THE WAGES PAID.

Q. UNLESS OTHERWISE SPECIFICALLY SPECIFIED, INCLUDE ALL CUTTING AND PATCHING OF EXISTING FLOORS, WALLS, PARTITIONS AND OTHER MATERIALS IN THE EXISTING BUILDING. THE CONTRACTOR SHALL RESTORE THESE AREAS TO ORIGINAL CONDITION.

R. ALL MATERIAL AND EQUIPMENT TO BE NEW UNLESS OTHERWISE NOTED AND SHALL BE IN ACCORDANCE WITH BUILDING STANDARDS.

U. THE FINAL ACCEPTANCE WILL BE MADE AFTER THE CONTRACTOR HAS ADJUSTED HIS EQUIPMENT, TESTED THE VARIOUS SYSTEMS, DEMONSTRATED THAT IT FULFILLS THE REQUIREMENTS OF THE DRAWINGS AND SPECIFICATIONS AND HAS FURNISHED ALL THE REQUIRED CERTIFICATES OF INSPECTION AND APPROVAL.

2. SCOPE OF WORK:

A. SCOPE OF WORK SHALL CONSIST OF PROVIDING LABOR, MATERIALS, EQUIPMENT, SERVICES AND FEES NECESSARY FOR COMPLETE AND SAFE INSTALLATION IN CONFORMITY WITH THE 2012 INTERNATIONAL PLUMBING CODE AND (STATE OF CONNECTICUT) SUPPLEMENT AND ALL OTHER LOCAL CODES AND REQUIREMENTS OF AUTHORITIES HAVING JURISDICTION, AS INDICATED ON DRAWINGS AND HEREIN SPECIFIED.

B. THE BASE BUILDING DRAWINGS, PLANS, DETAILS, SPECIFICATIONS AND SPECIFICATION ADDENDA ARE MADE PART OF THIS CONTRACT AND SHALL APPLY TO ALL WORK UNDER THE CONTRACT UNLESS OTHERWISE AMENDED, MODIFIED, SUPPLEMENTED OR SPECIFIED HEREIN.

C. THE CONTRACTOR SHALL FURNISH A WRITTEN GUARANTEE TO REPLACE OR REPAIR PROMPTLY AND ASSUME RESPONSIBILITY FOR ALL EXPENSES INCURRED FOR ANY WORKMANSHIP AND EQUIPMENT IN WHICH DEFECTS DEVELOP WITHIN ONE YEAR FROM THE DATE OF FINAL CERTIFICATE FOR PAYMENT AND/OR FROM DATE OR ACTUAL USE OF EQUIPMENT OR OCCUPANCY OF SPACES BY OWNER INCLUDED UNDER THE VARIOUS PARTS OF THE WORK, WHICHEVER DATE IS EARLIER. THIS WORK SHALL BE DONE AS DIRECTED BY THE OWNER. THIS GUARANTEE SHALL ALSO PROVIDE THAT WHERE DEFECTS OCCUR, THE CONTRACTOR WILL ASSUME RESPONSIBILITY FOR ALL EXPENSES INCURRED IN REPAIRING AND REPLACING WORK OF OTHER TRADES AFFECTED BY DEFECTS, REPAIRS OR REPLACEMENTS IN EQUIPMENT SUPPLIED BY THE CONTRACTOR.

D. THE CONTRACTOR SHALL GIVE NECESSARY NOTICE, FILE DRAWINGS AND SPECIFICATIONS WITH THE DEPARTMENT HAVING JURISDICTION, OBTAIN PERMITS OR LICENSES NECESSARY TO CARRY OUT THIS WORK AND PAY ALL FEES THEREFORE. THE CONTRACTOR SHALL ARRANGE FOR INSPECTION AND TESTS OF ANY OR ALL PARTS OF THE WORK IF SO REQUIRED BY AUTHORITIES AND PAY ALL CHARGES FOR SAME. THE CONTRACTOR SHALL PAY ALL COSTS FOR, AND FURNISH TO THE OWNER BEFORE FINAL BILLING, ALL CERTIFICATES NECESSARY AS EVIDENCE THAT THE WORK INSTALLED CONFORMS WITH ALL REGULATIONS WHERE THEY APPLY TO THIS WORK.

3. SHOP DRAWINGS:

A. PRIOR TO THE INSTALLATION OF ANY WORK AND PROCUREMENT OF EQUIPMENT PROVIDE COMPLETE SET OF COORDINATED SHOP DRAWINGS OF ALL NEW AND EXISTING EQUIPMENT, INDICATING CAPACITY DIMENSIONS AND SEQUENCE OF OPERATION FOR WRITTEN APPROVAL BY THE ARCHITECT AND ENGINEER.

B. INDICATE ON EACH SHOP DRAWINGS SUBMITTED:

1. PROJECT NAME AND LOCATION
2. NAME OF ARCHITECT AND ENGINEER
3. ITEM IDENTIFICATION
4. APPROVAL STAMP OF PRIME CONTRACTOR

C. SUBMISSIONS:

1. SUBMISSIONS 11 IN. X 17 IN. OR SMALLER: IF THE SUBMISSION IS A CATALOG CUT, THEN THE CONTRACTOR SHALL SUBMIT ONE ORIGINAL AND TWO COPIES. OTHERWISE, HE SHALL SUBMIT THREE COPIES. THE ARCHITECT WILL FORWARD THE ORIGINAL AND ONE COPY (TWO COPIES WHEN NO ORIGINAL IS RECEIVED) TO THE ENGINEER. ALL CATALOG CUTS SHALL BE COMPLETE.

2. SUBMISSIONS LARGER THAT 11 IN. X 17 IN.: SUBMIT TWO PRINTS AND ONE PAPER SEPIA TO THE ARCHITECT. THE ARCHITECT WILL FORWARD ONE PRINT AND THE PAPER SEPIA TO THE ENGINEER.

D. SUBMIT SHOP DRAWINGS FOR THE FOLLOWING:

1. PIPE AND FITTINGS VALVES
2. PLUMBING TRIM
3. PIPING LAYOUTS
4. SUPPORTS, HANGERS AND GUIDES
5. INSULATION

4. AS-BUILT DRAWINGS AND EQUIPMENT OPERATIONAL INSTRUCTIONS:

A. UPON COMPLETION AND ACCEPTANCE OF WORK, CONTRACTOR SHALL FURNISH WRITTEN INSTRUCTIONS AND EQUIPMENT MANUALS AND DEMONSTRATE TO THE OWNER THE PROPER OPERATION AND MAINTENANCE OF ALL EQUIPMENT AND APPARATUS FURNISHED UNDER THIS CONTRACT.

B. THESE INSTRUCTIONS SHALL BE TYPED ON 8-1/2 IN. X 11 IN. PAPER AND BOUND IN THREE RING BINDERS WITH CLEAR ACETATE COVERS. CONTRACTOR SHALL GIVE THREE COPIES OF THE INSTRUCTIONS TO THE OWNER AND ONE COPY TO THE ENGINEER.

C. THE INSTRUCTION BOOKLET SHALL BEAR THE NAME, ADDRESS AND TELEPHONE NUMBER OF THE PROJECT, ARCHITECT AND ENGINEER.

D. REPRODUCIBLE "AS-BUILT" DRAWINGS SHALL BE PROVIDED INDICATING THE AS INSTALLED CONDITIONS OF THE WORK. "AS-BUILT" DRAWINGS SHALL BE PROVIDED TO THE ARCHITECT AFTER COMPLETION OF THE INSTALLATION.

5. GENERAL PROVISIONS FOR PLUMBING WORK:

A. SPECIFICATIONS ARE OF SIMPLIFIED FORM AND INCLUDE INCOMPLETE SENTENCES. WORDS OR PHRASES SUCH AS "THE CONTRACTOR SHALL,"SHALL BE," "FURNISH," "PROVIDE," "A," "THE," AND "ALL" HAVE BEEN OMITTED FOR BREVITY.

B. DEFINITIONS:

1. "PROVIDE": TO SUPPLY, INSTALL AND CONNECT UP COMPLETE AND READY FOR SAFE AND REGULAR OPERATION THE PARTICULAR WORK REFERRED TO UNLESS SPECIFICALLY OTHERWISE NOTED.

2. "INSTALL": TO ERECT, MOUNT AND CONNECT COMPLETE WITH RELATED ACCESSORIES.

3. "FURNISH" OR "SUPPLY: TO PURCHASE, PROCURE, ACQUIRE AND DELIVER COMPLETE WITH RELATED ACCESSORIES.

4. "WORK": LABOR, MATERIALS, EQUIPMENT, APPARATUS, CONTROLS, ACCESSORIES AND OTHER ITEMS REQUIRED FOR PROPER AND COMPLETE INSTALLATION.

5. "WIRING": RACEWAY, FITTINGS, WIRE, BOXES AND RELATED ITEMS.

6. "CONCEALED": EMBEDDED IN MASONRY OR OTHER CONSTRUCTION, INSTALLED IN FURRED SPACES, WITHIN DOUBLE PARTITIONS OR HUNG CEILINGS, IN TRENCHES, IN CRAWL SPACES, OR IN ENCLOSURES.

7. "EXPOSED": NOT INSTALLED UNDERGROUND OR "CONCEALED" AS DEFINED ABOVE.

8. "SIMILAR" OR "EQUAL": EQUAL IN MATERIALS, WEIGHT, SIZE, DESIGN AND EFFICIENCY OF SPECIFIED PRODUCT.

C. QUALITY ASSURANCE:

1. QUALITY AND GAUGE OF MATERIALS: NEW, BEST OF THEIR RESPECTIVE KINDS, FREE FROM DEFECTS AND LISTED BY UNDERWRITERS LABORATORIES, INC., OR BEARING THEIR LABEL. MATERIALS AND EQUIPMENT OF SIMILAR APPLICATION SHALL BE OF SAME MANUFACTURER, EXCEPT AS NOTED.

3. "FURNISH" OR "SUPPLY: TO PURCHASE, PROCURE, ACQUIRE AND DELIVER COMPLETE WITH RELATED ACCESSORIES.

4. "WORK": LABOR, MATERIALS, EQUIPMENT, APPARATUS, CONTROLS, ACCESSORIES AND OTHER ITEMS REQUIRED FOR PROPER AND COMPLETE INSTALLATION.

2. GUARANTEE: ALL MATERIALS AND WORKMANSHIP SHALL BE GUARANTEED FOR A PERIOD OF ONE YEAR FROM DATE OF ACCEPTANCE OF WORK.

D. PRODUCT DELIVERY, STORAGE AND HANDLING:

1. MOVING OF EQUIPMENT: WHERE NECESSARY, SHIP IN CARTED SECTIONS OF SIZE TO PERMIT PASSING THROUGH AVAILABLE SPACES.

2. ACCESSIBILITY: FOR OPERATION, MAINTENANCE AND REPAIR. MINOR DEVIATIONS SHALL BE PERMITTED. CHANGES OF MAGNITUDE OR INVOLVING EXTRA COST ARE NOT PERMISSIBLE WITHOUT REVIEW. GROUP CONCEALED ELECTRICAL EQUIPMENT REQUIRING ACCESS WITH EQUIPMENT FREELY ACCESSIBLE THROUGH ACCESS DOORS.

E. PAINT SHALL BE THE BEST GRADE FOR ITS PURPOSE. DELIVER IN ORIGINAL SEALED CONTAINERS AND APPLY IN ACCORDANCE WITH MANUFACTURER'S INSTRUCTIONS. COLORS SHALL BE AS SELECTED. UTILIZE GALVANIZED IRON PRIMER ON PANEL AND PULL BOXES, AFTER FABRICATION. UTILIZE HOT DIPPED GALVANIZED OR DIPPED IN ZINC CHROMATE FOR: OUTLET BOXES, JUNCTION BOXES, CONDUIT HANGERS, RODS, INSERTS AND SUPPORTS. RED LEAD OR ZINC CHROMATE WITH FINISH TO MATCH SURROUNDINGS SHALL BE USED FOR MARRED SURFACES OF STEEL EQUIPMENT AND RACEWAYS. A FIELD APPLIED ZINC CHROMATE PRIME COAT SHALL BE UTILIZED FOR STEEL OR IRON WORK.

F. BRUSH AND CLEAN WORK PRIOR TO CONCEALING, PAINTING AND ACCEPTANCE. PAINTED EXPOSED WORK SOILED OR DAMAGED. CLEAN AND REPAIR TO MATCH ADJOINING WORK BEFORE FINAL ACCEPTANCE. REMOVE DEBRIS FROM INSIDE AND OUTSIDE OF MATERIAL AND EQUIPMENT.

G. FINAL LOCATIONS AND MOUNTING ORIENTATIONS OF ALL PLUMBING FIXTURES SHALL BE VERIFIED BY ARCHITECT.

H. ALL ACCESS DOOR LOCATIONS SHALL BE REVIEWED BY ARCHITECT PRIOR TO INSTALLATION.

6. PIPE AND FITTINGS:

A. SANITARY DRAINAGE AND VENT

3. CAST IRON PIPE: NO-HUB WITH SCHEDULE 40 PIPE AND FITTINGS.
4. NEOPRENE GASKET WITH 4-BAND CLAMPS ON ALL RISERS. 2-BAND CLAMPS ACCEPTABLE ON HORIZONTAL PIPE RUNS ONLY.
5. HUB AND SPIGOT, CAST-IRON SOIL PIPE AND FITTINGS

B. DOMESTIC WATER

1. TYPE L HARD COPPER TUBING WITH CAST BRONZE OR WROUGHT COPPER FITTINGS AND 95/5 TIN ANTIMONY SOLDER JOINTS.

C. ALL EXPOSED PIPE AND FITTINGS SHALL BE CHROME PLATED BRASS.

D. ALL EXPOSED PIPING PASSING THROUGH WALLS, FLOORS, CEILINGS, AND PARTITIONS SHALL BE PROVIDED WITH CHROME PLATED CAST BRASS ESCUTCHEONS HELD IN PLACE WITH SET SCREWS.

E. PROVIDE 18" MINIMUM SPUN CLOSED AIR CHAMBERS INSTALLED ON EACH WATER SUPPLY PIPE AT ALL LAVATORY AND SINK FIXTURES.

F. PROVIDE STAINLESS STEEL WATER HAMMER ARRESTOR WITH DIELECTRIC FITTINGS CAPABLE OF BOTH VERTICAL AND HORIZONTAL INSTALLATION, ON ALL PIPING RUN WITH QUICK CLOSING VALVES. SIZE PER MANUFACTURE RECOMMENDATION. (OR 18 MIN. SPUN CLOSED AIR CHAMBERS MAY INSTALLED ON EACH WATER SUPPLY.

7. VALVES:

A. BALL VALVES:

1. TWO-PIECE, BRONZE, END ENTRY, 600 PSI WWP; SIMILAR TO STOCKHAM #S-216 BR-R-T, #S-216 BR-R-S.

B. CHECK VALVES:

1. BRONZE, THREADED CAP, TEFLON DISC; SIMILAR TO STOCKHAM #B310T, B-320T.

8. INSULATION:

A. ALL INSULATION (INCLUDING JACKET, FACING AND ADHESIVE) SHALL HAVE PROCEDURES LISTED IN ASTM E-84, NFPA 255 AND UL 273; NOT EXCEEDING A FLAME SPREAD OF 25 AND A SMOKE DEVELOPED OF 50.

B. ON VALVES AND FITTINGS PROVIDE PRE-MOLDED FIBERGLASS FITTINGS. VAPOR SEAL INSULATION ON CW AND HW.

C. CW PIPING: PROVIDE 1 IN. THICK FIBERGLASS SECTION PIPE COVERING WITH VAPOR BARRIER JACKET.

D. HW PIPING: PROVIDE 1 IN. THICK FIBERGLASS SECTIONAL PIPE COVERING.

9. PLUMBING FIXTURES:

A. PROVIDE ALL FIXTURES WITH STOP VALVES AND SUPPLIES AND FIXTURE TRAPS AS REQUIRED.

B. ALL FIXTURES WILL BE SUPPLIED BY OWNER BY DESIGN BUILDER (KIMBALL CONSTRUCTION).

C. PROVIDE ALL COPPER SPUN CLOSED AIR CHAMBERS ON ALL FIXTURE SUPPLY PIPES. AIR CHAMBER SHALL BE 18 INCH LONG MINIMUM.

D. PROVIDE ALL WATTS MODEL LF05 LEAD FREE WATER HAMMER ARRESTOR ON ALL FIXTURE SUPPLY PIPES, INCLUDING WASHING MACHINE AND DISHWASHER SUPPLY.

9. PIPING SUPPORTS:

B. SUPPORT ALL PIPING FROM BUILDING CONSTRUCTION BY PROVIDING INSERTS, BEAM CLAMPS, STEEL FISHPLATES (IN CONCRETE FILL ONLY), AND ACCEPTABLE BRACKETS. SUBMIT ALL METHODS FOR REVIEW.

C. PROVIDE TRAPEZE HANGERS OF BOLTED ANGLES OR CHANNELS FOR GROUPED LINES AND SERVICES.

D. PROVIDE ADDITIONAL FRAMING WHERE BUILDING CONSTRUCTION IS INADEQUATE. SUBMIT FOR REVIEW.

E. SUSPENDED HORIZONTAL PIPING:

10. SUPPORT ALL PIPING INDEPENDENTLY FROM STRUCTURE USING HEAVY IRON-HINGED TYPE HANGERS, SIMILAR TO GRINNELL CLEVIS NO. 260.

11. PROVIDE ELECTROPLATED SOLID-BAND HANGERS SIMILAR TO AUTO-GRIP, FOR TWO-INCH AND SMALLER PIPE.

12. PROVIDE WALL BRACKETS FOR WALL SUPPORTED PIPING AND PROVIDE PIPE SADDLES FOR FLOOR MOUNTED PIPING.

13. SUSPEND PIPING FROM INSERTS, USING BEAM CLAMPS WITH RETAINING CLAMP OR LOCKNUT, STEEL FISHPLATES, CANTILEVER BRACKETS OR OTHER ACCEPTED MEANS. BEAM CLAMPS SHALL BE SIMILAR TO GRINNELL FIGURES 61, 87, 131, OR 225.

14. SUSPEND PIPING BY RODS WITH DOUBLE NUTS.

15. PROVIDE ADDITIONAL STEEL FRAMING AS REQUIRED AND ACCEPTED WHERE OVERHEAD CONSTRUCTION DOES NOT PERMIT FASTENING HANGER RODS IN REQUIRED LOCATIONS.

16. SUPPORT BRANCH FIXTURE WATER PIPING IN CHASES WITH COPPER-PLATED METAL BRACKETS, SECURED TO STUDS, SIMILAR TO HOLD RITE NOS. 102-18, 107-18, 102-26, OR 101-26.

E. PROVIDE 180 DEGREE ARC GALVANIZED METAL COVERING SHIELDS ON HANGERS FOR INSULATED PIPING WITHOUT INCOMPRESSIBLE INSULATING BLOCK IN INSULATION AT HANGERS.

F. MAXIMUM HANGER SPACING AS INDICATED.

1. PIPE 1 INCH AND SMALLER SHALL BE EVERY 8 FEET.
2. PIPE 1-1/4 INCH AND LARGER SHALL BE EVERY 10 FEET.
3. COPPER TUBING 1-1/4 INCH AND SMALLER SHALL BE EVERY 6 FEET.
4. COPPER TUBING 1-1/2 INCH AND LARGER SHALL BE EVERY 10 FEET.
5. CAST IRON: EVERY FIVE FEET AND AT EVERY FITTING OR JOINT.

G. VERTICAL PIPING:

17. PROVIDE SPACING AS INDICATED:

a. THREADED PIPING SHALL BE EVERY OTHER FLOOR LEVEL, AT A MAXIMUM OF 25 FEET ON CENTERS.

b. CAST IRON PIPING SHALL BE EVERY FLOOR LEVEL, MAXIMUM 20 FEET ON CENTERS; HUBLESS PIPE IS THE EXCEPTION, REQUIRING A MAXIMUM OF 10 FEET ON CENTERS.

c. TUBING SHALL BE EVERY FLOOR LEVEL MAXIMUM TEN FEET ON CENTERS.

H. EXPANSION ANCHORS:

1. PROVIDE SMOOTH WALL, NON-SELF DRILLING INTERNAL PLUG EXPANSION TYPE ANCHORS CONSTRUCTED OF AISC 12L14 STEEL AND ZINC PLATED IN ACCORDANCE WITH FED. SPEC. QQ-A-325 TYPE 1, CLASS 3.

2. DO NOT EXCEED 1/4 OF AVERAGE VALVES FOR A SPECIFIC ANCHOR SIZE USING 2000 PSIG CONCRETE ONLY, FOR MAXIMUM WORKING LOADS.

3. PROVIDE SPACING AND INSTALL ANCHORS IN ACCORDANCE WITH THE MANUFACTURER'S RECOMMENDATIONS.

4. EXPANSION ANCHORS SHALL BE U.L. LISTED AND SIMILAR TO HILTI HDI.

5. TESTS:

A. DRAINAGE AND VENT PIPING:

1. CAP ALL OUTLETS AND FILL PIPING SYSTEM TO OVERFLOWING FROM A POINT AT LEAST 10 FEET ABOVE THE FLOOR.

2. THE WATER LEVEL SHALL REMAIN CONSTANT THROUGHOUT THE TEST DURATION OF 2 HOURS.

C. ARRANGE AND COORDINATE TESTS WITH OWNER 48 HOURS IN ADVANCE NOTIFY ENGINEER AND ARCHITECT OF TEST AND DATE TIME.

LFG
LANDMARK FACILITIES GROUP, INC.
252 East Avenue
Norwalk, CT 06855
(203) 866-4626 Tel
(203) 866-8019 Fax

REV	DATE	DESCRIPTION
	12-2-22	ISSUE FOR CONSTRUCTION

DISHWASHER UPGRADE

NEW LEBANON SCHOOL
25 MEAD AVENUE
GREENWICH, CT 06830

SCALE: AS NOTED	APPROVED BY: LJG	DRAWN BY: LJG
DATE: 17 Nov 2022		CHECKED BY: LJG

PLUMBING SPECIFICATIONS

BID NUMBER:	LFG JOB NUMBER:	DRAWING NUMBER:
2396-22	1018;***;***	P-200